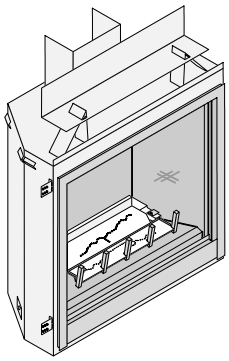

ProBuilder 36 CleanFace

(MV/GSB2/GSR2)

Installation Manual

⚠ WARNING: FIRE OR EXPLOSION HAZARD
Failure to follow safety warnings exactly could result in serious injury, death, or property damage.

- Do not store or use gasoline or other flammable vapors and liquids in the vicinity of this or any other appliance.
- **WHAT TO DO IF YOU SMELL GAS**
  - Do not try to light any appliance.
  - Do not touch any electrical switch; do not use any phone in your building.
  - Leave the building immediately
  - Immediately call your gas supplier from a neighbor's phone. Follow the gas supplier's instructions.
  - If you cannot reach your gas supplier, call the fire department.
- Installation and service must be performed by a qualified installer, service agency or the gas supplier.

HOT GLASS WILL CAUSE BURNS

DO NOT TOUCH GLASS UNTIL COOLED

NEVER ALLOW CHILDREN TO TOUCH GLASS

A barrier designed to reduce the risk of burns from the hot viewing glass is provided with this appliance and shall be installed for the protection of children and other at-risk individuals.

Listed by
Omni-Test Laboratories, Inc.
Report # 0028GF115S
ANSI Z21.88-2016
CSA 2.33-2016
CSA 2.17-2017

- **Built-In Direct Vent Fireplace**
- **Natural Gas or Propane**
- **Residential or Mobile Home**

This appliance may be installed in an aftermarket, permanently located, manufactured home (USA only) or mobile home, where not prohibited by local codes.
This appliance is only for use with the type of gas indicated on the rating plate. A conversion kit is supplied with the appliance.

INSTALLER: Leave this manual with the appliance.
CONSUMER: Retain this manual for future reference.

French language manuals at fireplacex.com
Manuels de langue Française à fireplacex.com

Travis Industries, Inc. 12521 Harbour Reach Dr., Mukilteo, WA 98275 www.travisproducts.com
© Copyright 2018, T.I.
$10.00 4/22/21 100-01488

Overview

This manual details the installation requirements for the 36 CF ProBuilder fireplace. For operating and maintenance instructions, refer to the 36 CF ProBuilder fireplace Owner's Manual.

Massachusetts Approval

This manual has been submitted to the Massachusetts Board of State Examiners of Plumbers and Gas Fitters

National Fireplace Institute

See NFI information to the right.

NATIONAL FIREPLACE INSTITUTE NFI CERTIFIED www.nficertified.org

We suggest that our gas hearth products be installed and serviced by professionals who are certified in the U.S. by the National Fireplace Institute® (NFI) as NFI Gas Specialists.

Listing Details

This appliance was listed by Omni Test Labs to ANSI Z21.88-2016. The listing label is attached to the appliance near the gas control valve. A copy of each version is shown below.

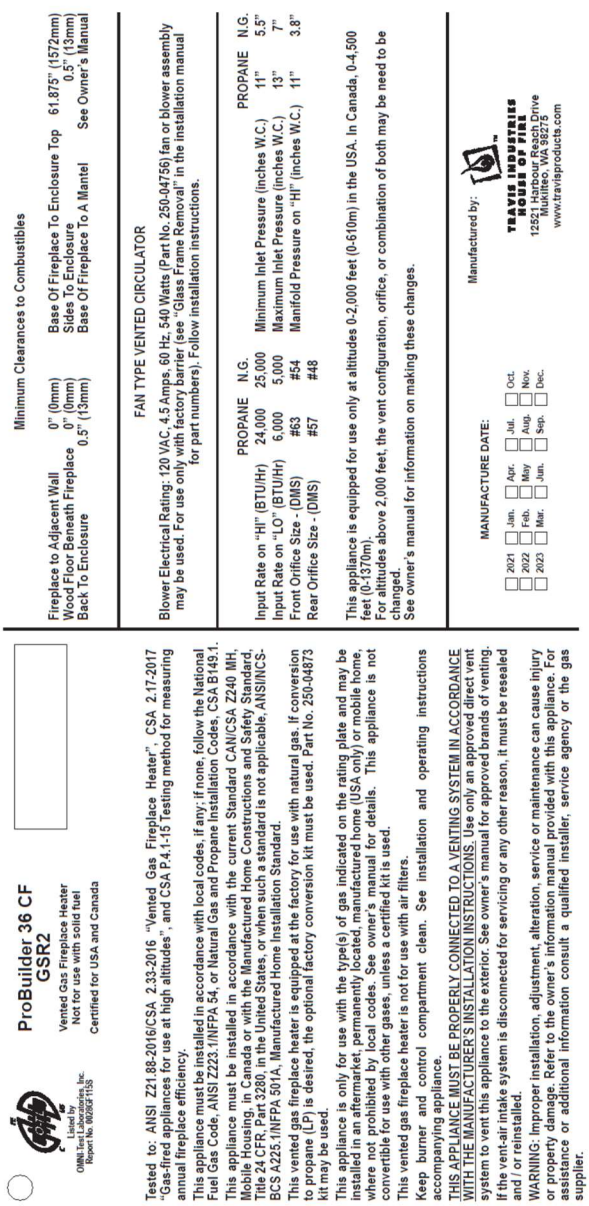

Listed by OMNI-Test Laboratories, Inc. Report No. 002SGF115S

ProBuilder 36 CF GSR2

Vented Gas Fireplace Heater
Not for use with solid fuel
Certified for USA and Canada

Tested to: ANSI Z21.88-2016/CSA 2.33-2016 "Vented Gas Fireplace Heater", CSA 2.17-2017 "Gas-fired appliances for use at high altitudes", and CSA P.4.1-15 Testing method for measuring annual fireplace efficiency.

This appliance must be installed in accordance with local codes, if any; if none, follow the National Fuel Gas Code, ANSI Z223.1/NFPA 54, or Natural Gas and Propane Installation Codes, CSA B149.1.

This appliance must be installed in accordance with the current Standard CAN/CSA Z240 MH, Mobile Housing, in Canada or with the Manufactured Home Constructions and Safety Standard, Title 24 CFR, Part 3280, in the United States, or when such a standard is not applicable, ANSI/NCSBCS A225.1/NFPA 501A, Manufactured Home Installation Standard.

This vented gas fireplace heater is equipped at the factory for use with natural gas. If conversion to propane (LP) is desired, the optional factory conversion kit must be used. Part No. 250-04873 kit may be used.

This appliance is only for use with the type(s) of gas indicated on the rating plate and may be installed in an aftermarket, permanently located, manufactured home (USA only) or mobile home, where not prohibited by local codes. See owner's manual for details. This appliance is not convertible for use with other gases, unless a certified kit is used.

This vented gas fireplace heater is not for use with air filters.

Keep burner and control compartment clean. See installation and operating instructions accompanying appliance.

THIS APPLIANCE MUST BE PROPERLY CONNECTED TO A VENTING SYSTEM IN ACCORDANCE WITH THE MANUFACTURER'S INSTALLATION INSTRUCTIONS. Use only an approved direct vent system to vent this appliance to the exterior. See owner's manual for approved brands of venting.

If the vent-air intake system is disconnected for servicing or any other reason, it must be resealed and / or reinstalled.

WARNING: Improper installation, adjustment, alteration, service or maintenance can cause injury or property damage. Refer to the owner's information manual provided with this appliance. For assistance or additional information consult a qualified installer, service agency or the gas supplier.

Minimum Clearances to Combustibles

Fireplace to Adjacent Wall	0" (0mm)	Base Of Fireplace To Enclosure Top	61.875" (1572mm)
Wood Floor Beneath Fireplace	0" (0mm)	Sides To Enclosure	0.5" (13mm)
Back To Enclosure	0.5" (13mm)	Base Of Fireplace To A Mantel	See Owner's Manual

FAN TYPE VENTED CIRCULATOR

Blower Electrical Rating: 120 VAC, 4.5 Amps, 60 Hz, 540 Watts (Part No. 250-04756) fan or blower assembly may be used. For use only with factory barrier (see "Glass Frame Removal" in the installation manual for part numbers). Follow installation instructions.

	PROPANE	N.G.		PROPANE	N.G.
Input Rate on "HI" (BTU/Hr)	24,000	25,000	Minimum Inlet Pressure (inches W.C.)	11"	5.5"
Input Rate on "LO" (BTU/Hr)	6,000	5,000	Maximum Inlet Pressure (inches W.C.)	13"	7"
Front Orifice Size - (DMS)	#63	#54	Manifold Pressure on "HI" (inches W.C.)	11"	3.8"
Rear Orifice Size - (DMS)	#57	#48			

This appliance is equipped for use only at altitudes 0-2,000 feet (0-610m) in the USA. In Canada, 0-4,500 feet (0-1370m).
For altitudes above 2,000 feet, the vent configuration, orifice, or combination of both may be need to be changed.
See owner's manual for information on making these changes.

MANUFACTURE DATE:
☐ 2021 ☐ Jan. ☐ Apr. ☐ Jul. ☐ Oct.
☐ 2022 ☐ Feb. ☐ May ☐ Aug. ☐ Nov.
☐ 2023 ☐ Mar. ☐ Jun. ☐ Sep. ☐ Dec.

Manufactured by:
TRAVIS INDUSTRIES HOUSE OF FIRE
12521 Harbour Reach Drive
Mukilteo, WA 98275
www.travisproducts.com

CAUTION: Do not operate this appliance with glass removed, cracked or broken. Replacement of the panel(s) should be done by a licensed or qualified service person. Hot while in operation. Do not Touch. Severe burns may result. Keep children, clothing, furniture, gasoline and other flammable liquids having flammable vapors away.

1309

Listed by OMNI-Test Laboratories, Inc. Report No. 002SGF115S

ProBuilder 36 CF GSB2 / MV

Vented Gas Fireplace Heater
Not for use with solid fuel
Certified for USA and Canada

Tested to: ANSI Z21.88-2016/CSA 2.33-2016 "Vented Gas Fireplace Heater", CSA 2.17-2017 "Gas-fired appliances for use at high altitudes", and CSA P.4.1-15 Testing method for measuring annual fireplace efficiency.

This appliance must be installed in accordance with local codes, if any; if none, follow the National Fuel Gas Code, ANSI Z223.1/NFPA 54, or Natural Gas and Propane Installation Codes, CSA B149.1.

This appliance must be installed in accordance with the current Standard CAN/CSA Z240 MH, Mobile Housing, in Canada or with the Manufactured Home Constructions and Safety Standard, Title 24 CFR, Part 3280, in the United States, or when such a standard is not applicable, ANSI/NCSBCS A225.1/NFPA 501A, Manufactured Home Installation Standard.

This vented gas fireplace heater is equipped at the factory for use with natural gas. If conversion to propane (LP) is desired, the optional factory conversion kit must be used. Part No. 250-04755 (GSB2) or 250-04754 (MV) kit may be used.

This appliance is only for use with the type(s) of gas indicated on the rating plate and may be installed in an aftermarket, permanently located, manufactured home (USA only) or mobile home, where not prohibited by local codes. See owner's manual for details. This appliance is not convertible for use with other gases, unless a certified kit is used.

This vented gas fireplace heater is not for use with air filters.

Keep burner and control compartment clean. See installation and operating instructions accompanying appliance.

THIS APPLIANCE MUST BE PROPERLY CONNECTED TO A VENTING SYSTEM IN ACCORDANCE WITH THE MANUFACTURER'S INSTALLATION INSTRUCTIONS. Use only an approved direct vent system to vent this appliance to the exterior. See owner's manual for approved brands of venting.

If the vent-air intake system is disconnected for servicing or any other reason, it must be resealed and / or reinstalled.

WARNING: Improper installation, adjustment, alteration, service or maintenance can cause injury or property damage. Refer to the owner's information manual provided with this appliance. For assistance or additional information consult a qualified installer, service agency or the gas supplier.

Minimum Clearances to Combustibles

Fireplace to Adjacent Wall	0" (0mm)	Base Of Fireplace To Enclosure Top	61.875" (1572mm)
Wood Floor Beneath Fireplace	0" (0mm)	Sides To Enclosure	0.5" (13mm)
Back To Enclosure	0.5" (13mm)	Base Of Fireplace To A Mantel	See Owner's Manual

FAN TYPE VENTED CIRCULATOR (OPTIONAL)

Blower Electrical Rating: 120 VAC, 4.5 Amps, 60 Hz, 540 Watts (Part No. 250-04756) fan or blower assembly may be used. For use only with factory barrier (see "Glass Frame Removal" in the installation manual for part numbers). Follow installation instructions.

	PROPANE	N.G.		PROPANE	N.G.
Input Rate on "HI" (BTU/Hr)	24,000	25,000	Minimum Inlet Pressure (inches W.C.)	11"	5.5"
Input Rate on "LO" (BTU/Hr)	12,000	13,000	Maximum Inlet Pressure (inches W.C.)	13"	7"
Front Orifice Size - (DMS)	#63	#54	Manifold Pressure on "HI" (inches W.C.)	11"	3.8"
Rear Orifice Size - (DMS)	#57	#48			

This appliance is equipped for use only at altitudes 0-2,000 feet (0-610m) in the USA. In Canada, 0-4,500 feet (0-1370m).
For altitudes above 2,000 feet, the vent configuration, orifice, or combination of both may be need to be changed.
See owner's manual for information on making these changes.

MANUFACTURE DATE:
☐ 2021 ☐ Jan. ☐ Apr. ☐ Jul. ☐ Oct.
☐ 2022 ☐ Feb. ☐ May ☐ Aug. ☐ Nov.
☐ 2023 ☐ Mar. ☐ Jun. ☐ Sep. ☐ Dec.

Manufactured by:
TRAVIS INDUSTRIES HOUSE OF FIRE
12521 Harbour Reach Drive
Mukilteo, WA 98275
www.travisproducts.com

CAUTION: Do not operate this appliance with glass removed, cracked or broken. Replacement of the panel(s) should be done by a licensed or qualified service person. Hot while in operation. Do not Touch. Severe burns may result. Keep children, clothing, furniture, gasoline and other flammable liquids having flammable vapors away.

Overview 2
Massachusetts Approval 2
National Fireplace Institute 2
Listing Details 2
Installation Options 6
Heating Specifications 6
Dimensions 6
Packing List 7
Additional Items Required 7
Recommended Installation Procedure 7
Optional Equipment Installation 7
Massachusetts Requirements 8
Requirements for the Commonwealth of Massachusetts 8
MANUFACTURER REQUIREMENTS 8
Fireplace Placement Requirements 9
Clearances 9
Raised Fireplaces 9
Minimum Framing Dimensions 10
Min. Framing - Without CoolSmart TV kit 10
Min Framing – With CoolSmart TV Kit 10
Minimum Vent "Bump Out" application 11
Nailing Brackets 12
Standard vs. Extended Position 13
Header and Pipe Shield Installation 14
Corner Installations 17
Televisions Placed Above the Fireplace 18
Outdoor fireplace installations 19
Gas Line Requirements 20
Fuel 20
Gas Line Connection 20
Gas Inlet Pressure 20
Gas Line Location 21
Electrical Connection 22
Optional Wall Switch or Thermostat Installation (MV and GSB2 Versions Only) 23
Parallel Connection **Series Connection** 23
Vent Requirements 24
Vent Clearances 24
Vent Firestop or Thimble 24
Altitude Considerations 24
Approved Termination 24
Approved Vent 24
Vent Installation 25
Exhaust Restrictor Position 25
Diffuser 26
Vent Configurations 27
Minimum Vent Configuration 27
Vent Configuration: Vertical Termination 28
Vent Configuration: Horizontal Termination with Vertical Rise 29
Masonry Chimney Conversions 30
Class A Chimney Conversion 31
Termination Requirements 32
Hearth Requirements 33
Facing Requirements 34
Mantel Requirements 40
Mantel Column Clearances 40
Use of a Non-Combustible Mantel Below Listed Mantel Clearances 41
Finalizing the Installation 42
MV Units Only - Pilot Flame Inspection - (see instructions on page 45) 42
GSB2 Units Only - Pilot Flame Inspection - (see instructions on page 45) 42
Air Shutter Adjustment 43
Location of Controls 44
MV Units Only - Starting the Pilot 45
Pilot Fuel Conservation Timer (MV units) 46
Pilot Fuel Conservation Timer (GSB & GSR units) 47
Glass Frame Removal and Installation 48
Barrier Screen Visual Deflector Adjustment 50
Shipping Retaining Nut Removal 51
Log Set Installation 52
Ember bed Glass and Ember Material Installation (GSR2 ONLY) 58
Ember bed Glass Installation 58
Ember Material Installation (GSR2 ONLY) 59
Ember Installation (GSB2 or MV) 59
Rock Wool Placement (All Models) 59
LP Conversion Instructions 60
Wall Mount Remote Thermostat installation (GSB2 and MV Units Only) 64
Packing List 64
Installation 64
Wiring Diagram – MV Version 66
Optional Blower Wiring 66
Wiring Diagram – GSB2 Version 67
Wiring Diagram – GSR2 Version 68
CoolSmart TV - Installation Overview (Optional) 69
CoolSmart TV - Installation Requirements 70
CoolSmart TV - Framing the Chase 71
CoolSmart TV - Fireplace Preparation 72
Using oval pipe to get past an obstruction 74
CoolSmart TV - Reduced Mantel Height 74

Safety Warnings

- Failure to follow all of the requirements may result in property damage, bodily injury, or even death.

Young children should be carefully supervised when they are in the same room as the appliance. Toddlers, young children and others may be susceptible to accidental contact burns. A physical barrier is recommended if there are at risk individuals in the house. To restrict access to a fireplace or stove, install an adjustable safety gate to keep toddlers, young children and other at risk individuals out of the room and away from hot surfaces.

Children and adults should be alerted to the hazards of high surface temperature and should stay away to avoid burns or clothing ignition. Do not touch the hot surfaces of the heater. Educate all children of the danger of a high-temperature heater.

Due to the high temperature, the heater should be located out of traffic and away from furniture and draperies.

- This unit must be installed by a qualified installer to prevent the possibility of an explosion.
- This appliance must be installed in accordance with all local codes, if any; if not, in U.S.A. follow ANSI Z223.1 and NFPA 54(88), in Canada follow CSA B149.1.
- A manufactured home (USA only) or mobile home OEM installation must conform with the Manufactured Home Construction and Safety Standard, Title 24 CFR, Part 3280, or, when such a standard is not applicable, the Standard for Manufactured Home Installations, ANSI/NCSBCS A225.1, or Standard for Gas Equipped Recreational Vehicles and Mobile Housing, CSA Z240.4. This appliance may be installed in Manufactured Housing only after the home is site located.
- All exhaust gases must be vented outside the structure of the living-area. Combustion air is drawn from outside the living-area structure. The venting must not be connected to a chimney flue serving a separate solid-fuel burning appliance.
- Notify your insurance company before hooking up this fireplace.
- The instructions in this manual must be strictly adhered to. Do not use makeshift methods or compromise in the installation. Improper installation will void the warranty and safety listing.
- This heater is approved for use with natural gas (NG) or propane (LP). Burning the incorrect fuel will void the warranty and safety listing and may cause an extreme safety hazard. Direct questions about the type of fuel used to your dealer.
- Contact your local building officials to obtain a permit and information on any installation restrictions or inspection requirements in your area.
- If the flame becomes sooty, dark orange in color, or extremely tall, do not operate the heater. Call your dealer and arrange for proper servicing.
- It is imperative that control compartments, screens, or circulating air passageways of the heater be kept clean and free of obstructions. These areas provide the air necessary for safe operation.
- Do not operate the heater if it is not operating properly in any fashion or if you are uncertain. Call your dealer for a full explanation of your heater and what to expect.
- Do not store or use gasoline or other flammable liquids in the vicinity of this heater.
- Do not operate if any portion of the heater was submerged in water or if any corrosion occurs. Immediately call a qualified service technician to inspect the appliance and to replace any part of the control system and any gas control which has been under water.

Safety Warnings (continued)

- Because this heater can be controlled by a thermostat there is a possibility of the heater turning on and igniting any items placed on or near the appliance.
- Light the heater using the built-in igniter. Do not use matches or any other external device to light your heater.
- Never remove, replace, modify or substitute any part of the heater unless instructions are given in this manual. All other work must be done by a trained technician. Don't modify or replace orifices.
- The viewing glass should be opened only for conducting service (or lighting the pilot on millivolt units).

Suggestions on how to limit the need to restart the pilot during the heating season can be found on page 46.

- Allow the heater to cool before carrying out any maintenance or cleaning.
- Operate the heater according to the instructions included in this manual.
- If the main burners do not start correctly turn the gas off and call your dealer for service.
- This unit is not for use with solid fuel.
- Do not place anything inside the firebox (except the optional artwork).
- **Warning:** Do not operate appliance with the glass front removed, cracked or broken. Replacement of the glass should be done by a licensed or qualified service person.
- Do not throw this manual away. This manual has important operating and maintenance instructions that you will need at a later time. Always follow the instructions in this manual.
- Instruct everyone in the house how to shut gas off to the appliance and at the gas main shutoff valve. The gas main shutoff valve is usually next to the gas meter or propane tank and requires a wrench to shut off.
- A barrier designed to reduce the risk of burns from the hot viewing glass is provided with this appliance and shall be installed for the protection of children and other at-risk individuals.
- If the barrier becomes damaged, the barrier shall be replaced with the manufacturer's barrier for this appliance.
- Clothing or other flammable material should not be placed on or near the appliance.
- Any safety screen, guard, or barrier removed for servicing an appliance must be replaced prior to operating the appliance.
- Installation and repair should be done by a qualified service person. The appliance should be inspected before use and at least annually by a professional service person. More frequent cleaning might be required due to excessive lint from carpeting, bedding material, et cetera. It is imperative that control compartments, burners, and circulating air passageways of the appliance be kept clean.
- **Travis Industries, Inc. grants no warranty, implied or stated, for the installation or maintenance of your heater, and assumes no responsibility of any consequential damage(s).**

Proposition 65 Warning: Fuels used in gas, woodburning or oil fired appliances, and the products of combustion of such fuels, contain chemicals known to the State of California to cause cancer, birth defects and other reproductive harm.

California Health & Safety Code Sec. 25249.6

Travis Gas Fireplaces. Stoves and Inserts are protected by one or more of the following patents; U.S. 8,469,021, 7,066,170, 6,602,068, 6,443,726, 6,953,037; Canada 2755517 as well as other U.S. and Foreign Patents pending.

Installation Options

- Residential or Mobile Home
- Straight or Corner Placement
- Raised or Floor Placement
- Internal or External Chase
- Bedroom Approved

Heating Specifications

		Natural Gas	Propane
36 CF ProBuilder	Approximate Heating Capacity (in square feet)*	Up to 1,150	Up to 1,150
	Maximum BTU Input Per Hour	25,000	24,000

* Heating capacity will vary with floor plan, insulation, and outside temperature.

Dimensions

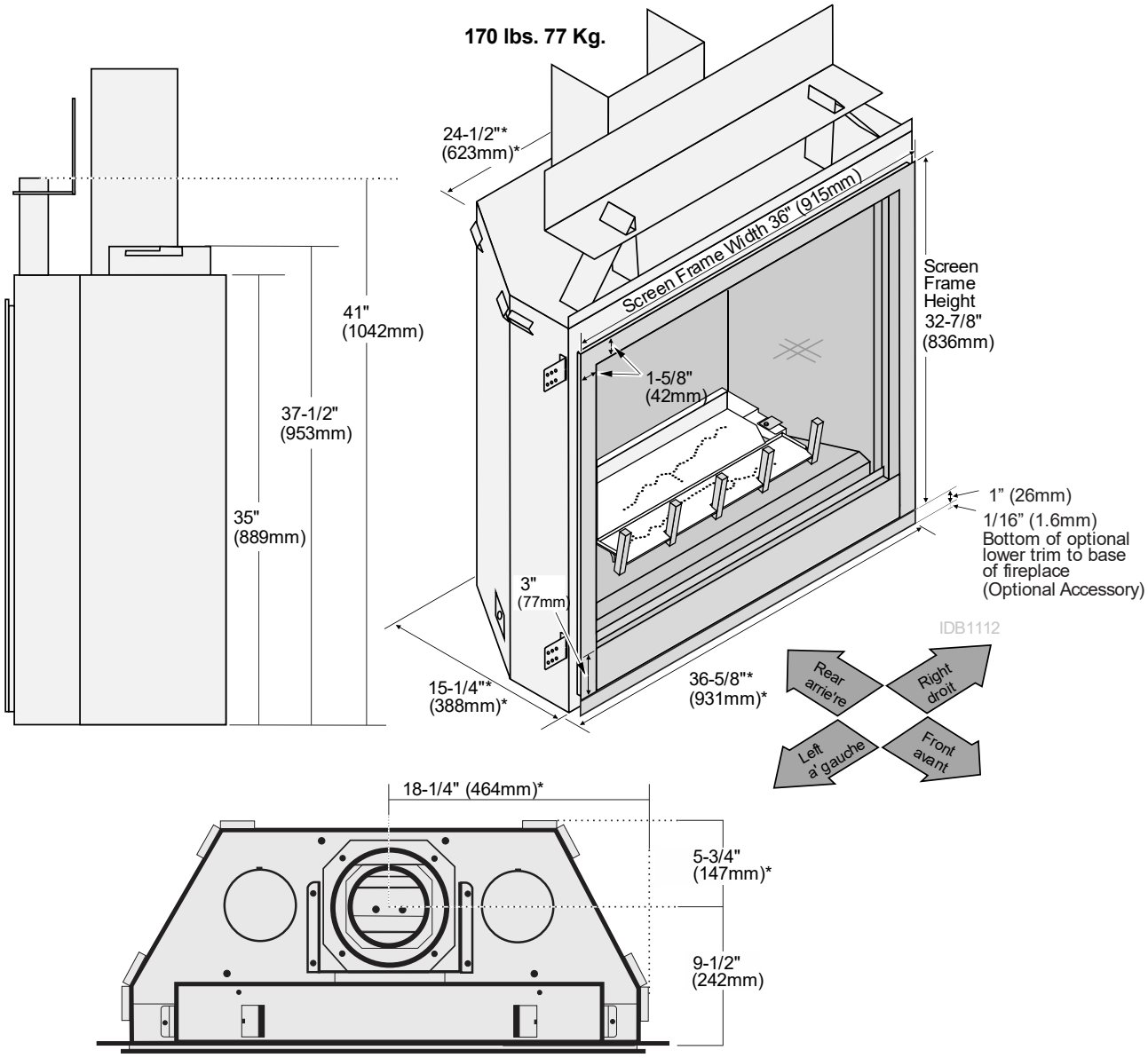

***Dimensions Include the standoffs**

Packing List

- LP (Propane) Conversion Kit:
  Rear Burner Orifice (#57), Front Burner Orifice (#63), Pilot Orifice (0.14 LP), LP Regulator
- Thimble (2-Piece Assembly)

- Pipe Shield

- Header Shield

- The GSB2 and MV versions include a log set.
- Wall Switch, Cover Plate, and Wire (GSB2 and MV only)
- Remote (GSR2 only)

Additional Items Required

- **<u>The GSR2 version of this fireplaces requires a log set</u>** (Oak = 94500626, Birch = 94500624)
- Gas Line Equipment (shutoff valve, pipe, etc.)
- Electrical Equipment (min. 14 gauge, grounded line)

Recommended Installation Procedure

- Frame the opening for the fireplace. Make sure to allow for vent installation.
- Install the vent, gas line and electrical hook-up.
- Install the drywall.
- Install the hearth (if applicable).
- Install the facing (if applicable).
- Install the mantel (if applicable).
- Finalize the installation (see page 40).

Optional Equipment Installation

- Before placing fireplace, install optional Ember-Glo lights (leave ember glass out), blower, then remote.
- If using Propane, convert the appliance.
- Install fireplace.
- If using optional firebacks, install them.
- Install ember glass (if used).
- Install logs, ember chunks, and rockwool.

Massachusetts Requirements

NOTE: The following requirements reference various Massachusetts and national codes not contained in this document.

Requirements for the Commonwealth of Massachusetts

For all side wall horizontally vented gas fueled equipment installed in every dwelling, building or structure used in whole or in part for residential purposes, including those owned or operated by the Commonwealth and where the side wall exhaust vent termination is less than seven (7) feet above finished grade in the area of the venting, including but not limited to decks and porches, the following requirements shall be satisfied:

Installation of Carbon Monoxide Detectors

At the time of installation of the side wall horizontal vented gas fueled equipment, the installing plumber or gasfitter shall observe that a hard wired carbon monoxide detector with an alarm and battery back-up is installed on the floor level where the gas equipment is to be installed. In addition, the installing plumber or gasfitter shall observe that a battery operated or hard wired carbon monoxide detector with an alarm is installed on each additional level of the dwelling, building or structure served by the side wall horizontal vented gas fueled equipment. It shall be the responsibility of the property owner to secure the services of qualified licensed professionals for the installation of hard wired carbon monoxide detectors.

In the event that the side wall horizontally vented gas fueled equipment is installed in a crawl space or an attic, the hard wired carbon monoxide detector with alarm and battery back-up may be installed on the next adjacent floor level.

In the event that the requirements of this subdivision cannot be met at the time of completion of installation, the owner shall have a period of thirty (30) days to comply with the above requirements; provided, however, that during said thirty (30) day period, a battery operated carbon monoxide detector with an alarm shall be installed.

Approved Carbon Monoxide Detectors

Each carbon monoxide detector as required in accordance with the above provisions shall comply with NFPA 720 and be ANSI/UL 2034 listed and IAS certified.

Signage

A metal or plastic identification plate shall be permanently mounted to the exterior of the building at a minimum height of eight (8) feet above grade directly in line with the exhaust vent terminal for the horizontally vented gas fueled heating appliance or equipment. The sign shall read, in print size no less than one-half (1/2) inch in size, “GAS VENT DIRECTLY BELOW. KEEP CLEAR OF ALL OBSTRUCTIONS”.

Inspection

The state or local gas inspector of the side wall horizontally vented gas fueled equipment shall not approve the installation unless, upon inspection, the inspector observes carbon monoxide detectors and signage installed in accordance with the provisions of 248 CMR 5.08(2)(a)1 through 4.

Exemptions

The following equipment is exempt from 248 CMR 5.08(2)(a)1 through 4:

• The equipment listed in Chapter 10 entitled “Equipment Not Required To Be Vented” in the most current edition of NFPA 54 as adopted by the Board; and

• Product Approved side wall horizontally vented gas fueled equipment installed in a room or structure separate from the dwelling, building or structure used in whole or in part for residential purposes.

MANUFACTURER REQUIREMENTS

Gas Equipment Venting System Provided

When the manufacturer of Product Approved side wall horizontally vented gas equipment provides a venting system design or venting system components with the equipment, the instructions provided by the manufacturer for installation of the equipment and the venting system shall include:

• Detailed instructions for the installation of the venting system design or the venting system components; and

• A complete parts list for the venting system design or venting system.

Gas Equipment Venting System NOT Provided

When the manufacturer of a Product Approved side wall horizontally vented gas fueled equipment does not provide the parts for venting the flue gases, but identifies “special venting systems”, the following requirements shall be satisfied by the manufacturer:

• The referenced “special venting system” instructions shall be included with the appliance or equipment installation instructions; and

• The “special venting systems” shall be Product Approved by the Board, and the instructions for that system shall include a parts list and detailed installation instructions.

A copy of all installation instructions for all Product Approved side wall horizontally vented gas fueled equipment, all venting instructions, all parts lists for venting instructions, and/or all venting design instructions shall remain with the appliance or equipment at the completion of the installation.

See Gas Connection section for additional Commonwealth of Massachusetts requirements.

Fireplace Placement Requirements

- Fireplace must be installed on a level surface capable of supporting the fireplace and vent
- Fireplace must be placed directly on wood or non-combustible surface (not on linoleum or carpet)
- Fireplace should be located out of traffic and away from furniture and avoid burns.
- Fireplace must be placed so the gaps below and above the glass frame do not become blocked.
- Fireplace may be placed in a bedroom. Please be aware of the large amount of heat this appliance produces when determining a location.

Clearances

(a) Clearance to Side of Fireplace 1/2” (13mm). Do not place insulation in this space.
NOTE: Drywall (or other combustible) may contact the first ½” of the sides of the fireplace.

(b) Clearance to Back of Fireplace 1/2” (13mm). Do not place insulation in this space.

(c) When installed, walls in front of the fireplace must be a minimum 0” (0mm) to the side of the fireplace standoffs.

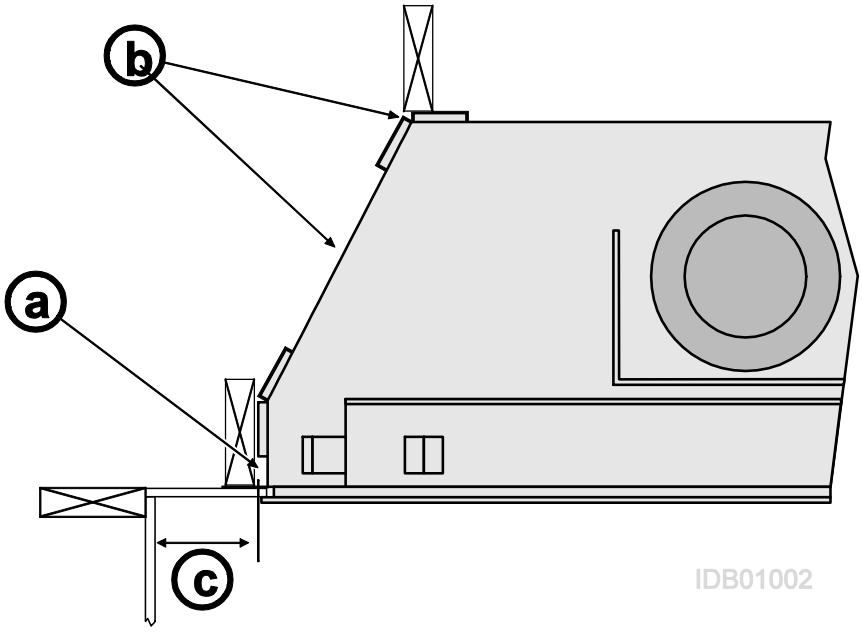

Raised Fireplaces

- The fireplace (and hearth, if desired) may be placed on a platform designed to support the fireplace and vent.
- The base of the fireplace must be a minimum 60” below the room ceiling.

Minimum Framing Dimensions

Min. Framing - Without CoolSmart TV kit

WARNING

When using a CoolSmart TV kit, see section: "CoolSmart TV - Framing the Chase" on page 71.

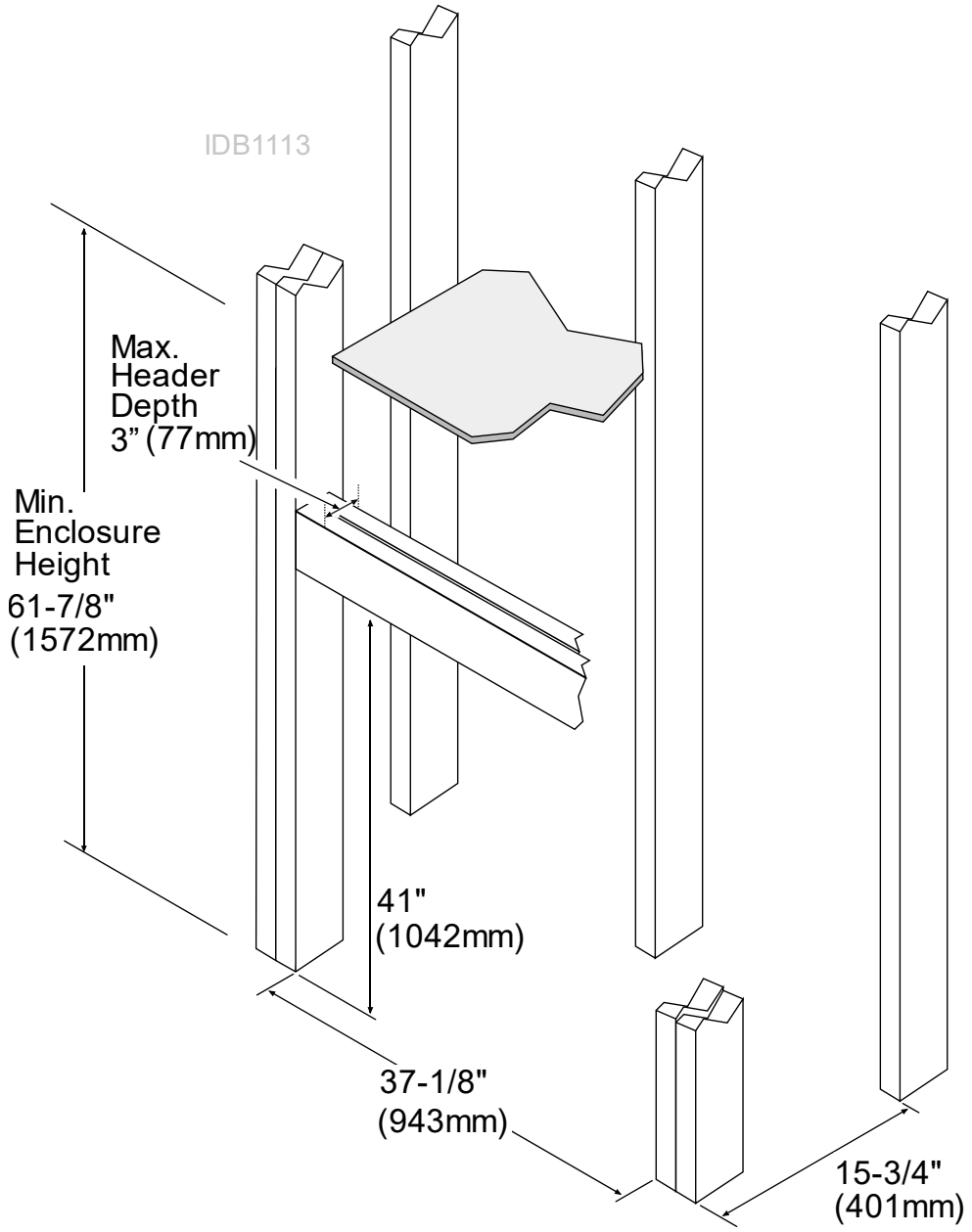

The fireplace enclosure must be a minimum 61-7/8" (1572mm) tall. Do not build into the fireplace enclosure.

Min Framing – With CoolSmart TV Kit

When using a CoolSmart TV kit, see section: "**CoolSmart TV - Framing the Chase**" on page 71 of this manual or the installation instructions included with the kit for minimum framing dimensions.

Minimum Vent "Bump Out" application

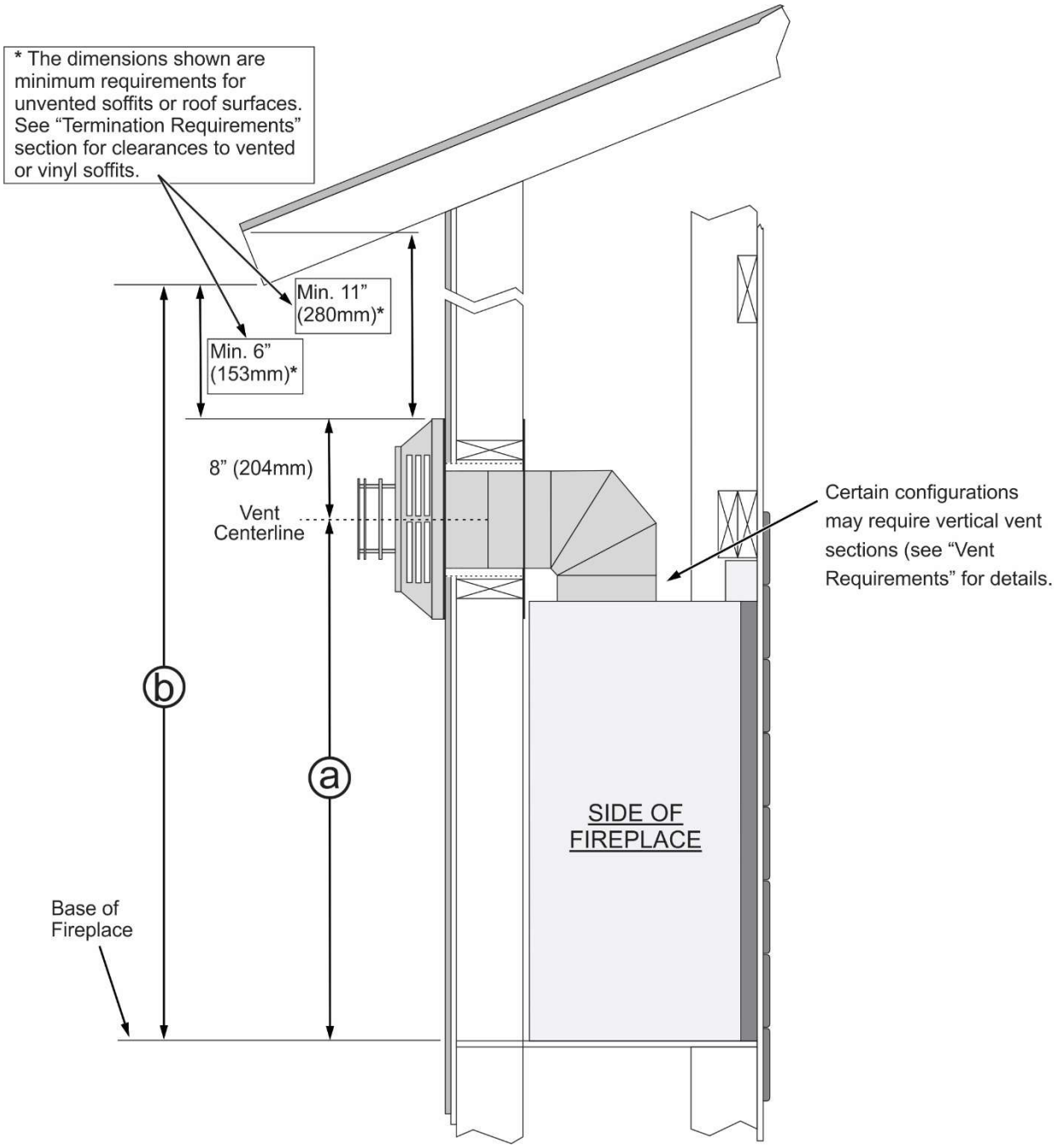

PB36 CF	LP & NG Installations 12" Vertical Vent Section (Min. Rise)
a Vent Centerline	Approx. 53-1/2" (1359mm)
b FP Base to Roof Eave	Approx. 67-1/2" (1715mm)

Nailing Brackets

The fireplace has nailing brackets on both sides. Secure the fireplace to the framing with the nailing brackets.

NOTE: Make sure the fireplace is square and plumb when placed in the framing. Measured corner-to-corner the fireplace should be square. Use shims to insure the fireplace is square.

NOTE: The nailing brackets have two positions: standard and extended. See the section "Facing Requirements" for details on which position is best for your installation.

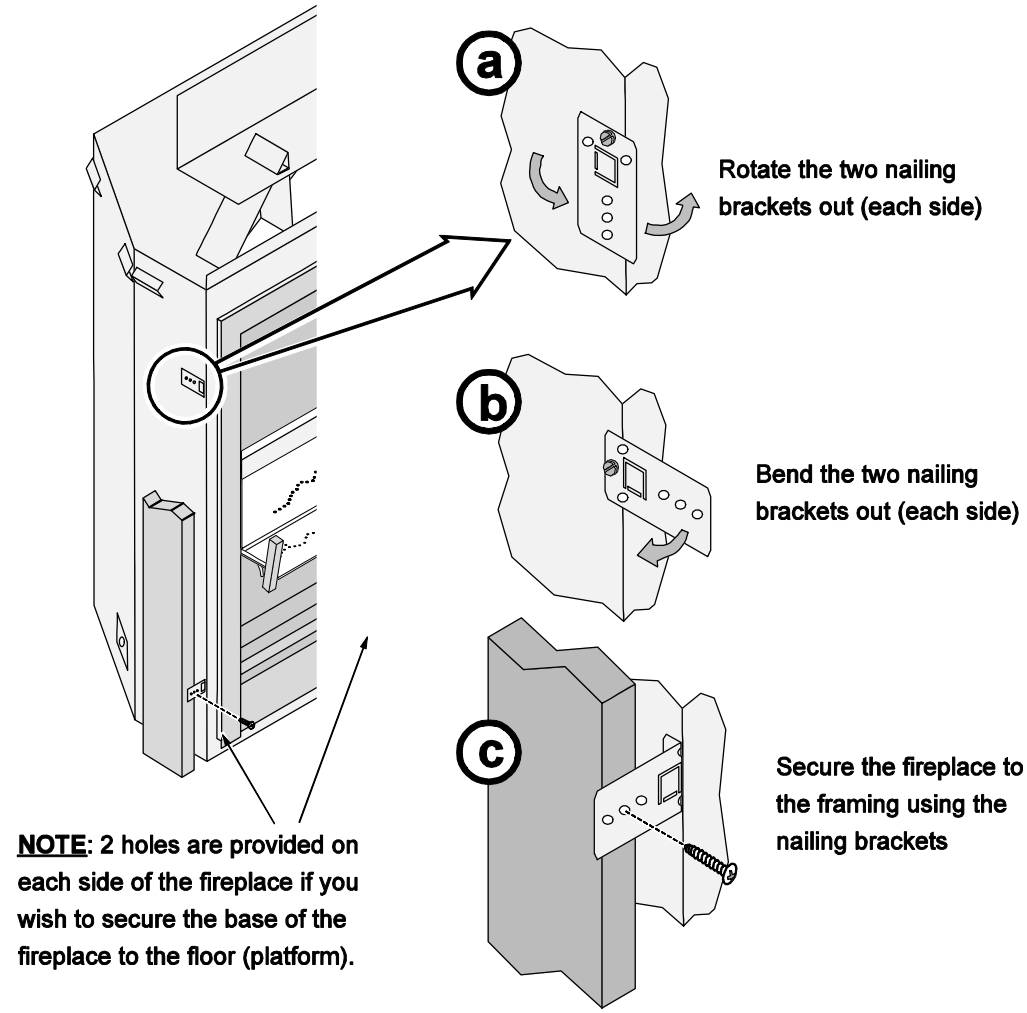

Standard Position
(nailing brackets as shown below)

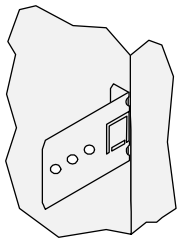

Extended Position
(rotate nailing brackets as shown below)

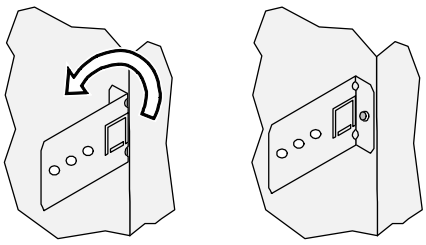

Standard vs. Extended Position

There are two positions that the standoff/heat shield assembly can be installed. The standoffs are shipped in the standard (forward) position.

- If the unit is installed in the standard position no modification is needed.
- If the unit is being installed in the extended position, the standoff/heat shield assembly must be repositioned back ½" (see illustration below).
  NOTE: see pages 11 & 35.for additional details about standard vs. extended installations.

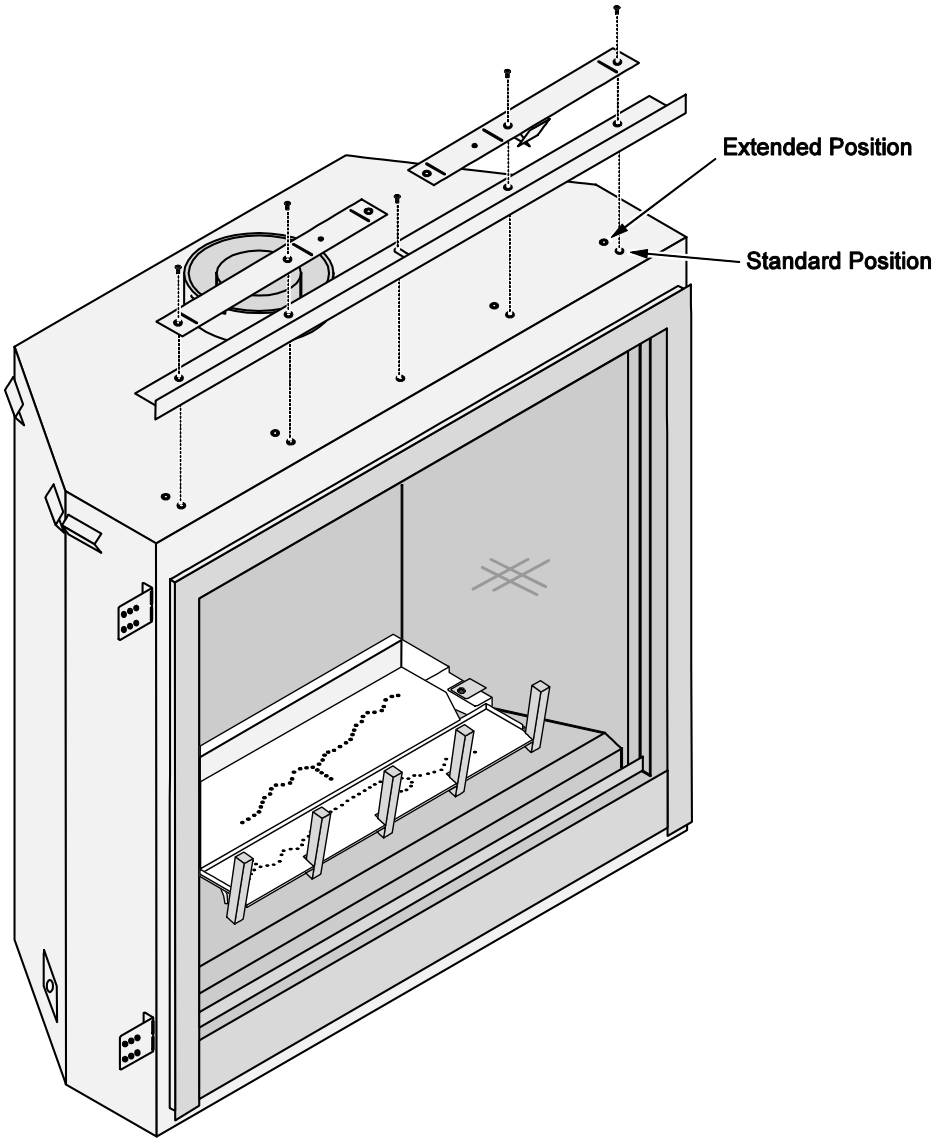

Header and Pipe Shield Installation

The header and pipe shield <u>must be installed as shown below</u>.

NOTE: The header and pipe shields may be installed after the fireplace is in place and vent attached (this allows for the fireplace to fit into the framing underneath the header and for the vent to be installed more easily).

1 At each of the perforations, bend the sides of the pipe shield backwards 90° as shown below.

NOTE: The bottom flanges should be facing outward

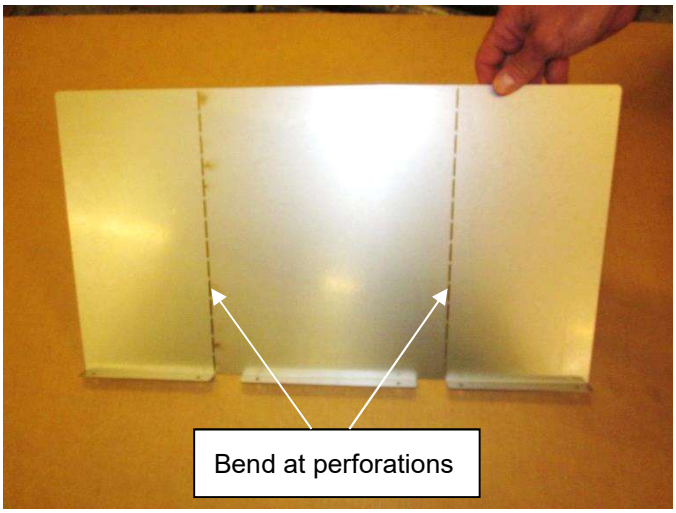

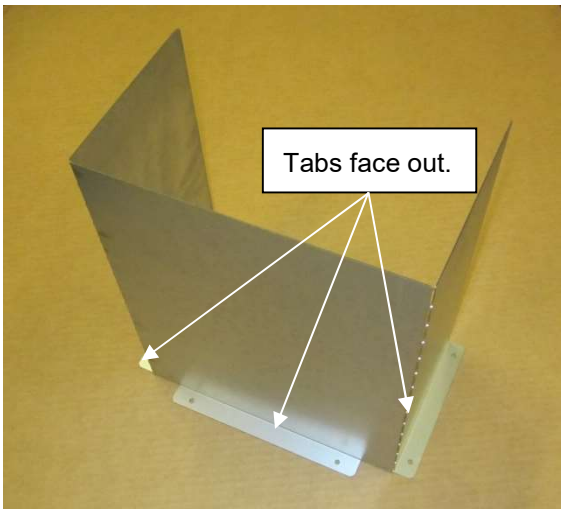

2 Remove the (4) screws, (2) from each side of the starter collar. Line up the holes on the pipe shield tabs with the holes from the screws you just removed. Use the screws to attach the pipe shield to the top of the fireplace.

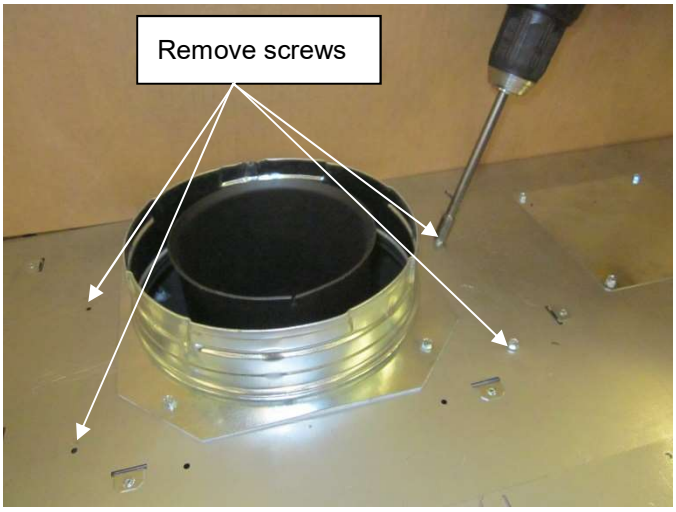

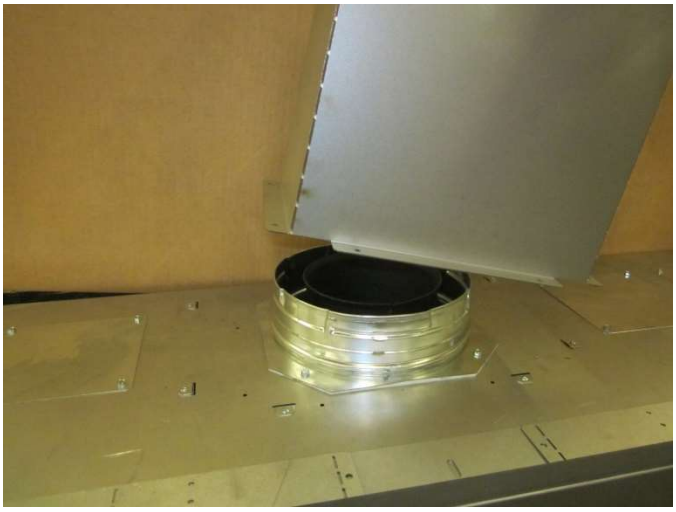

3 The (2) header standoffs are screwed down flat to front edge of the top of the fireplace. On each standoff, remove the screw that is closest to the center of the fireplace (keep screw for reinstallation). Bend the legs at the perforations as shown below and attach the foot of the standoff to the top of the fireplace using the screw removed earlier in this step.

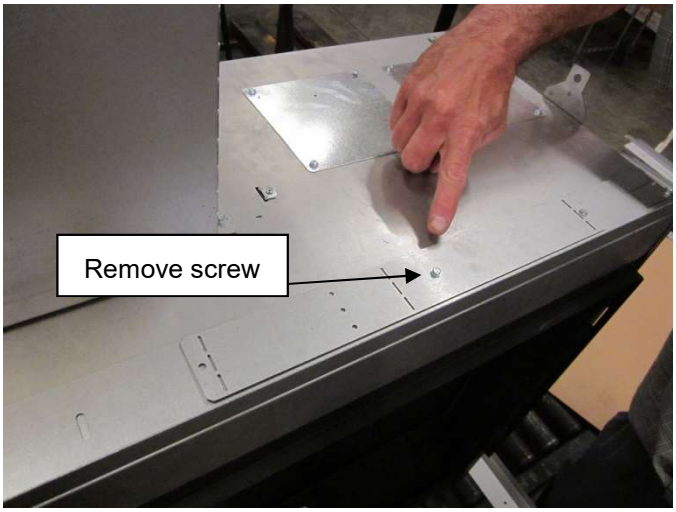

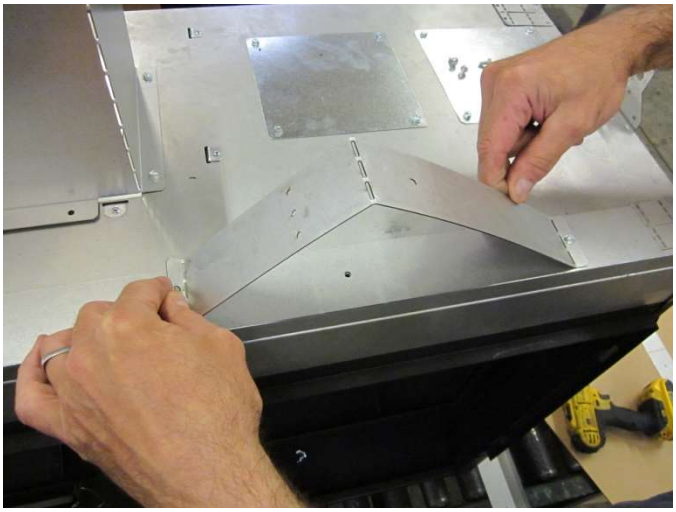

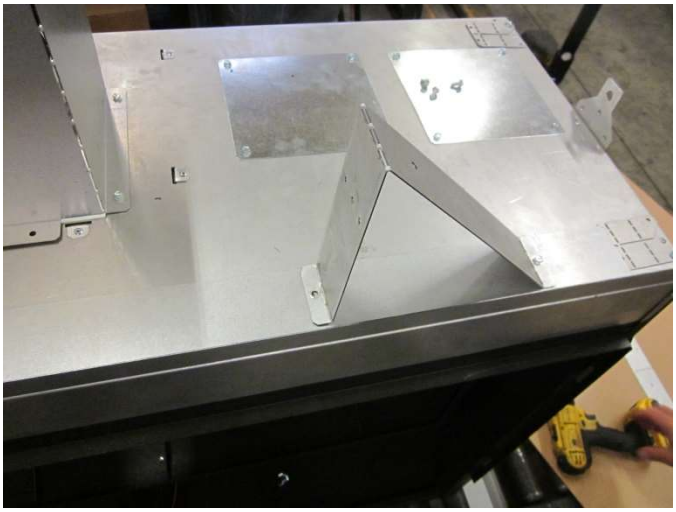

4 On the header shield, bend the two tabs downward approximately 90 degrees. Set the header shield onto the standoffs with the 90° bend facing the pipe shield. The tips of the standoffs will protrude through the heat shield. Attach the heat shield to the standoffs by aligning the holes on the heat shield tabs with the holes in the header standoffs and secure using the included screws

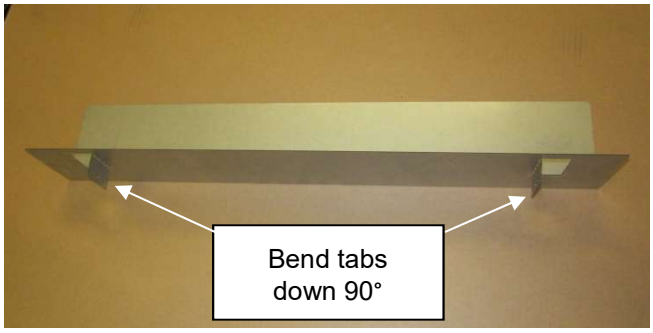

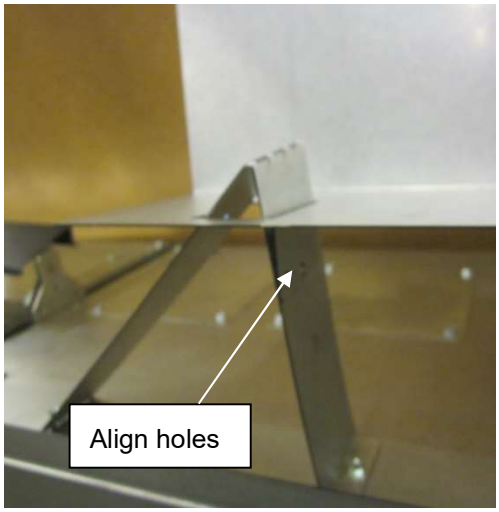

5 When finished the fireplace should be configured like the picture below.

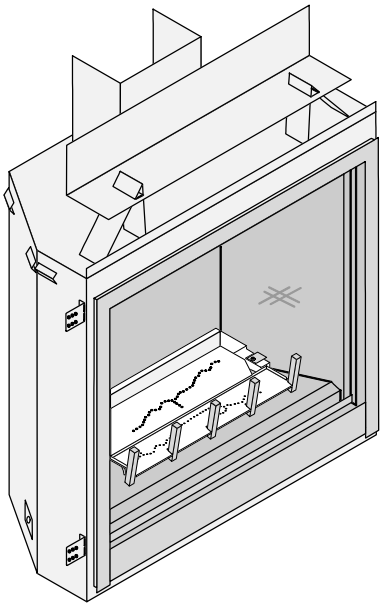

Corner Installations

A typical 45° installation uses the framing dimensions shown in the illustration below (NOTE: all clearances still apply).

	36 CF PB
(a) Corner to Wall (minimum)	38-1/2” 978mm
(b) Corner to Center of Flue (typical)	13” 331mm

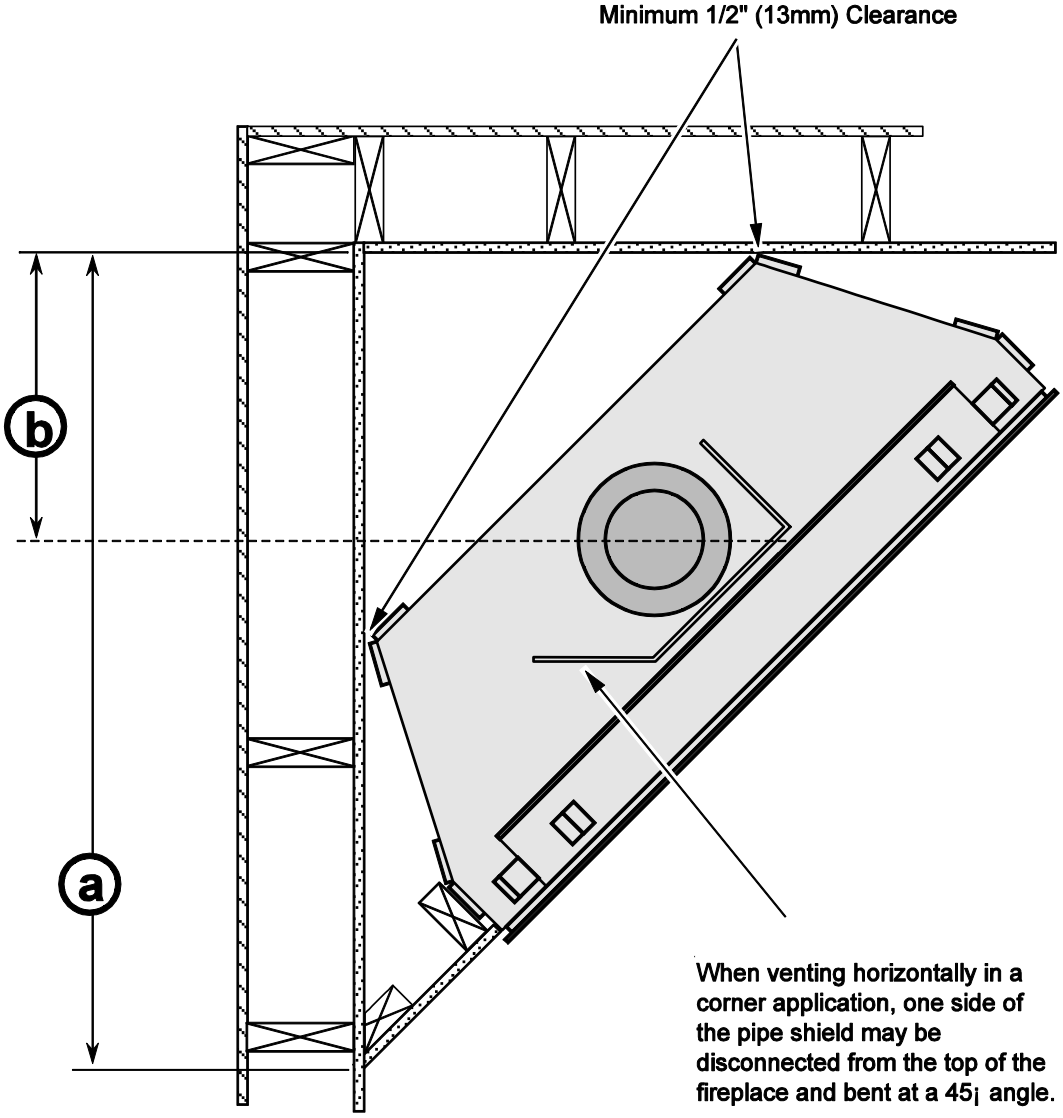

Televisions Placed Above the Fireplace

The following section gives guidelines to place a television above the fireplace.

IMPORTANT NOTE REGARDING TELEVISIONS AND THIS FIREPLACE

Most television manufacturers instruct the homeowner not to place the television above a heat source like this fireplace. Doing so may decrease the longevity of the television and negate the warranty. If you do place a television above the fireplace, you should place a mantel (or build-out) between the fireplace and television (or **use a CoolSmart TV Wall™ kit**). Follow the guidelines below to reduce the amount of heat reaching the television. Travis Industries does not take responsibility for any negative impact to televisions placed near this fireplace.

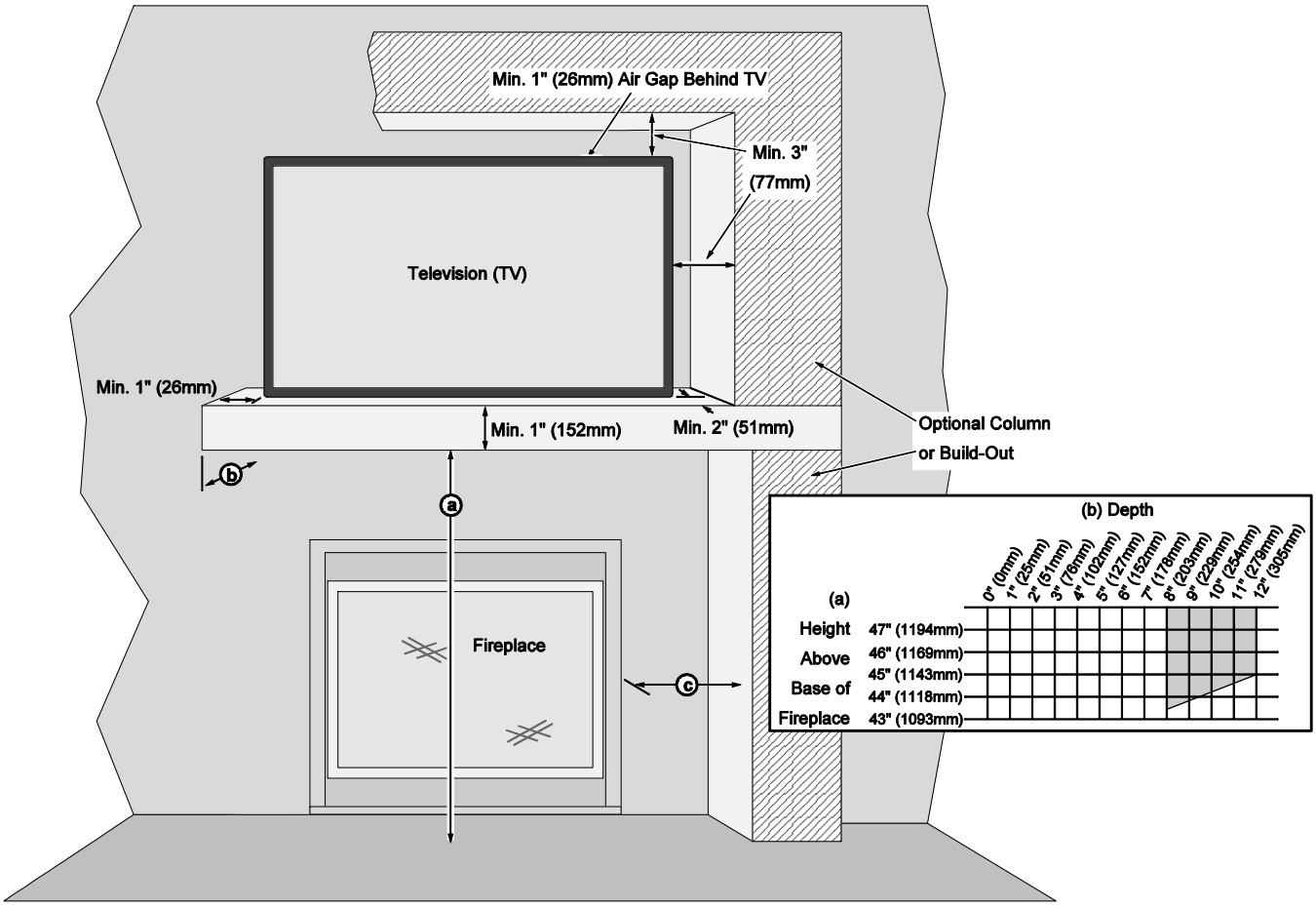

Minimum Dimensions:

(a) Minimum Mantel Height above Base of Fireplace*	43-1/2” (1106mm) with 8” (203mm) mantel depth*
(b) Mantel Depth*	Minimum 8” (203mm)*
(c) Optional Columns (or Build-Out)	Must Meet Side Wall Clearances (Measured to the side of fireplace ZC-can)

*** Minimum mantel depth must be 8” to allow heat to dissipate. If using a mantel larger than 8”, make sure to adjust the mantel height (a) to meet the mantel clearance (see mantel requirements and/or chart above).**

- The mantel must extend 2” in front of the television and 1” to both sides.
- If you have a television that is greater than 6” deep (including the 1” gap behind), you will need to alter the mantel depth and height (see the example below).
- The television must have a 1” gap to the wall to allow for proper cooling. Any build-out near the television must maintain a 3” gap to the top and sides to prevent heat from being trapped near the television.

EXAMPLE: If you have a television that is 9” deep (including the 1” gap behind), the mantel must be 11”. The mantel height would need to be 44.5” (1156mm) above the base of the fireplace.

WIRING NOTE: If running wiring into the enclosure, you may wish to use thermal insulating wrap around the wiring. Secure the wiring to protect from contact with hot surfaces.

Outdoor fireplace installations

Travis Industries Inc. gas-fired fireplaces are suitable for installation into outdoor areas protected from direct water impingement. In addition to maintaining listed mantel and combustibles clearances, a rain protection overhang factor of 1/2 shall be constructed to the front and to each side of installed appliances (see the illustration to the right). All wiring connections to line power shall be in accordance with outdoor requirements of NECA NFPA 70.

Warnings Regarding Tempered Glass

This fireplace uses tempered glass which is susceptible to thermal shock. Take care to prevent water from contacting the fireplace, especially if it is hot.

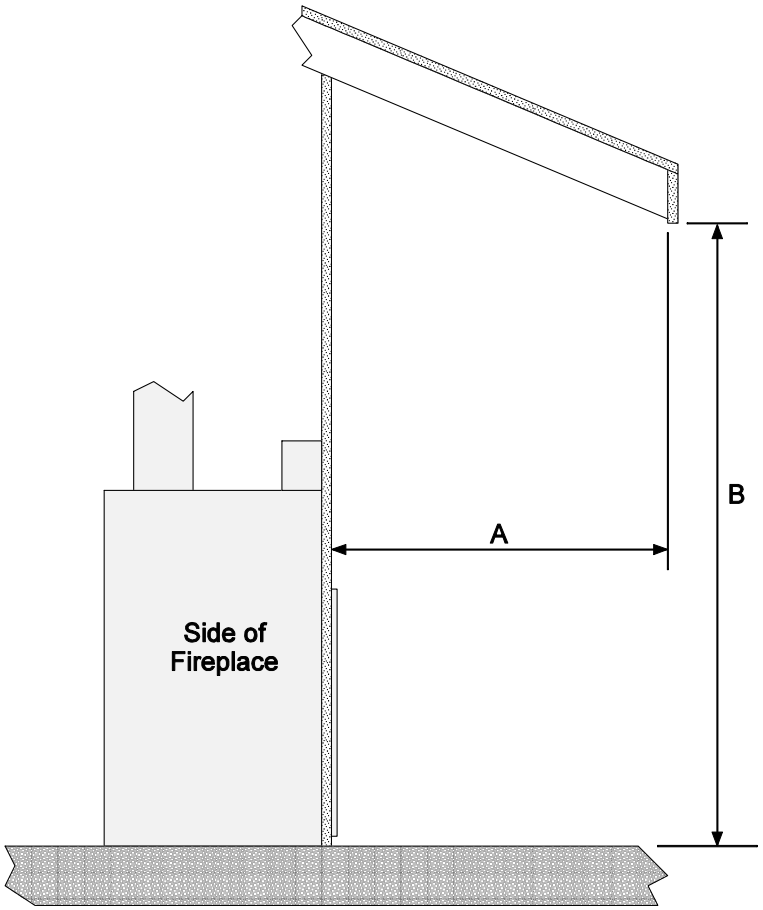

The overhang (A) must extend at least 1/2 the roofline height (B). Height is measured from the base of the fireplace.

For example: if the rooline (B) is 8' above the base of the fireplace, the overhang (A) must be at least 4'.

Gas Line Requirements

MASSACHUSETTS INSTALLATIONS - WARNING:

THIS PRODUCT MUST BE INSTALLED BY A LICENSED PLUMBER OR GAS FITTER WHEN INSTALLED WITHIN THE COMMONWEALTH OF MASSACHUSETTS.

OTHER MASSACHUSETTS CODE REQUIREMENTS:

- Flexible connector must not be longer than 36 inches.
- Shutoff valve must be a “T” handle gas cock.
- Only direct vent sealed combustion products are approved for bedrooms or bathrooms.
- Fireplace dampers must be removed or welded in the open position prior to the installation of a fireplace insert or gas log.
- A carbon monoxide (CO) detector is required in the same room as the appliance.

- The gas line must be installed in accordance with all local codes and the requirements listed below. In the absence of local codes, follow ANSI 223.1 in US/Canada or AS/NZS 5601.1 in Australia.
- The fireplace and gas control valve must be disconnected from the gas supply piping during any pressure testing of that system at test pressures in excess of 1/2 psig (3.5 kPA). For pressures under 1/2 psig (3.5 kPA), isolate the gas supply piping by closing the manual shutoff valve.
- Leak test all gas line joints and the gas control valve prior to and after starting the fireplace.
- This unit has been listed using the included internal gas shutoff valve.

Fuel

- This fireplace is designed either for natural gas or for propane (but not for both).

Gas Line Connection

- Installation must be performed by a qualified installer, service agency or the gas supplier (In Massachusetts a licensed plumber/gasfitter).
- The gas inlet accepts 1/2" MPT.

Gas Inlet Pressure

Gas Pressure	Max. Input Pressure	Min. Input Pressure	Max. Manifold Pressure	Min. Manifold Pressure
Natural Gas	7" W.C. (1.74 kPA)	5.5” W.C. (1.37 kPA)	3.8” W.C. (0.95 kPA)	1.1” W.C. (0.27 kPA)
Propane	13" W.C. (3.23 kPA)	11” W.C. (2.74 kPA)	11” W.C. (2.74 kPA)	2.9” W.C. (0.72 kPA)

- If the pressure is not sufficient, make sure the piping used is large enough, the supply regulator is adequately adjusted, and the total gas load for the residence does not exceed the amount supplied.
- The supply regulator (the regulator that attaches directly to the residence inlet or to the propane tank) should supply gas at the suggested input pressure listed above. Contact the local gas supplier if the regulator is at an improper pressure.

MV Version

Directions for Connecting a Gas Pressure Test Gauge

The gas control valve (shown to the right) has two test ports for testing input (line pressure) and output (manifold) pressure. Loosen the brass screw on either test port and place a 5/16” i.d. rubber or plastic tube over the tapered test port. Connect the tube to the test gauge.

WARNING: The brass screw must be tightened after testing to prevent gas leakage.

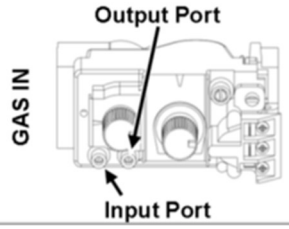

GSB2/GSR2 Version

Directions for Connecting a Gas Pressure Test Gauge

The gas control valve (shown to the right) has two test ports for testing input (line pressure) and output (manifold) pressure. Loosen the brass screw on either test port and place a 5/16” i.d. rubber or plastic tube over the tapered test port. Connect the tube to the test gauge.

WARNING: The brass screw must be tightened after testing to prevent gas leakage.

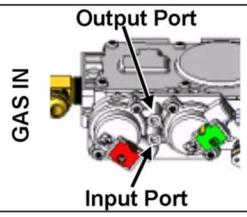

Gas Line Location

NOTE FOR RIGID PIPE: When using rigid pipe, you may wish to disconnect the shutoff valve from the fireplace and route the pipe through the fireplace wall. First, disconnect the gas line from the shutoff valve. Disconnect the shutoff valve from the cover plate (4 screws outside fireplace). The pipe may be routed through the cover plate and the shutoff valve and gas line may be re-attached inside the fireplace.

- Gas line must be plumbed to the left side. See illustration and table below to determine gas line location.
- Fireplace accepts 1/2” MPT fitting.

	a	b
Left Side Gas Pass-Through Location	7” (178mm)	1-3/4” (45mm)

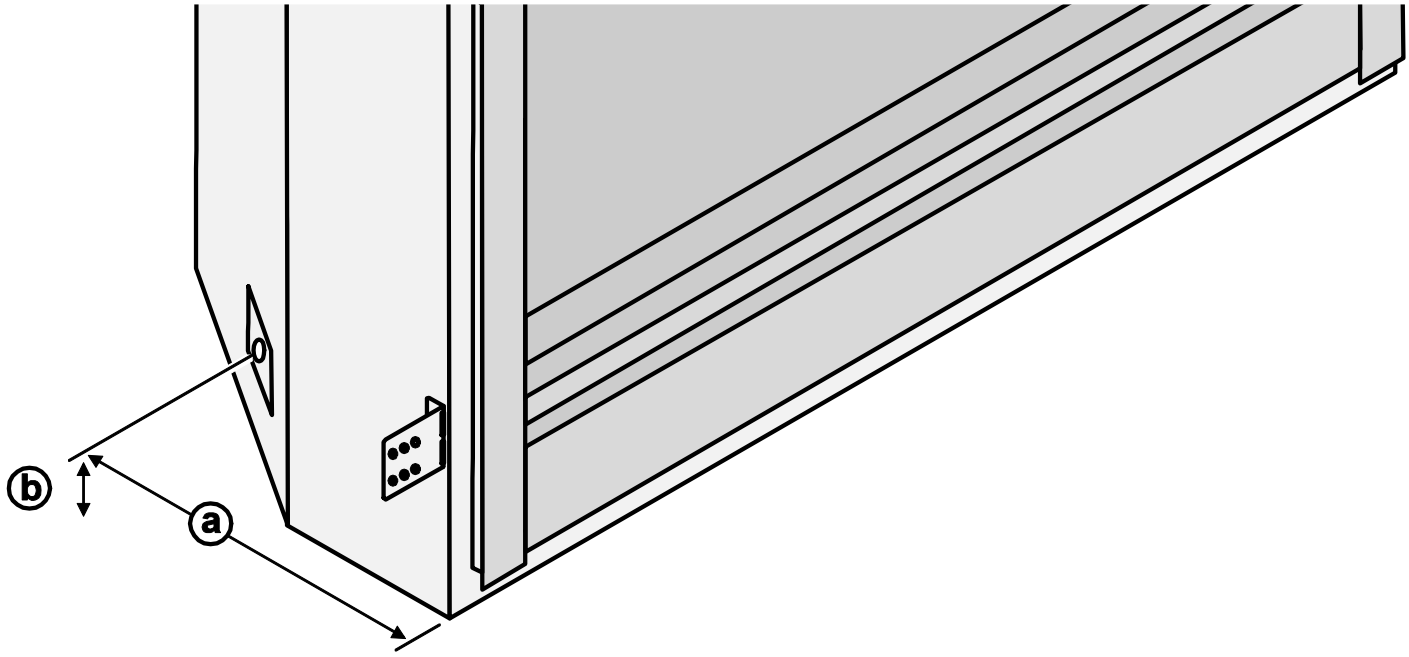

Electrical Connection

- The electrical line to the grounded receptacle inside the fireplace must be installed by a qualified installer and must meet all local codes.
- Make sure the household breaker is shut off prior to working on any electrical lines.
- The appliance, when installed, must be electrically grounded in accordance with local codes or, in the absence of local codes, with the National Electrical Code, ANSI/NFPA 70, or the Canadian Electrical Code, CSA C22.1.
- The electrical line must be a min. 14 gauge, and supply 120 Volts, 60 Hz (typical max amps: 5).
- Route the electrical connection through the junction box cover plate and attach to the hookup wires pictured below.

Caution: Label all wires prior to disconnection when servicing controls. Wiring errors can cause improper and dangerous operation.

Do not connect 110-120 VAC to the gas control valve or wiring system of this fireplace.

	a	b
Electrical Junction Box Location	7” (178mm)	1-3/4” (45mm)

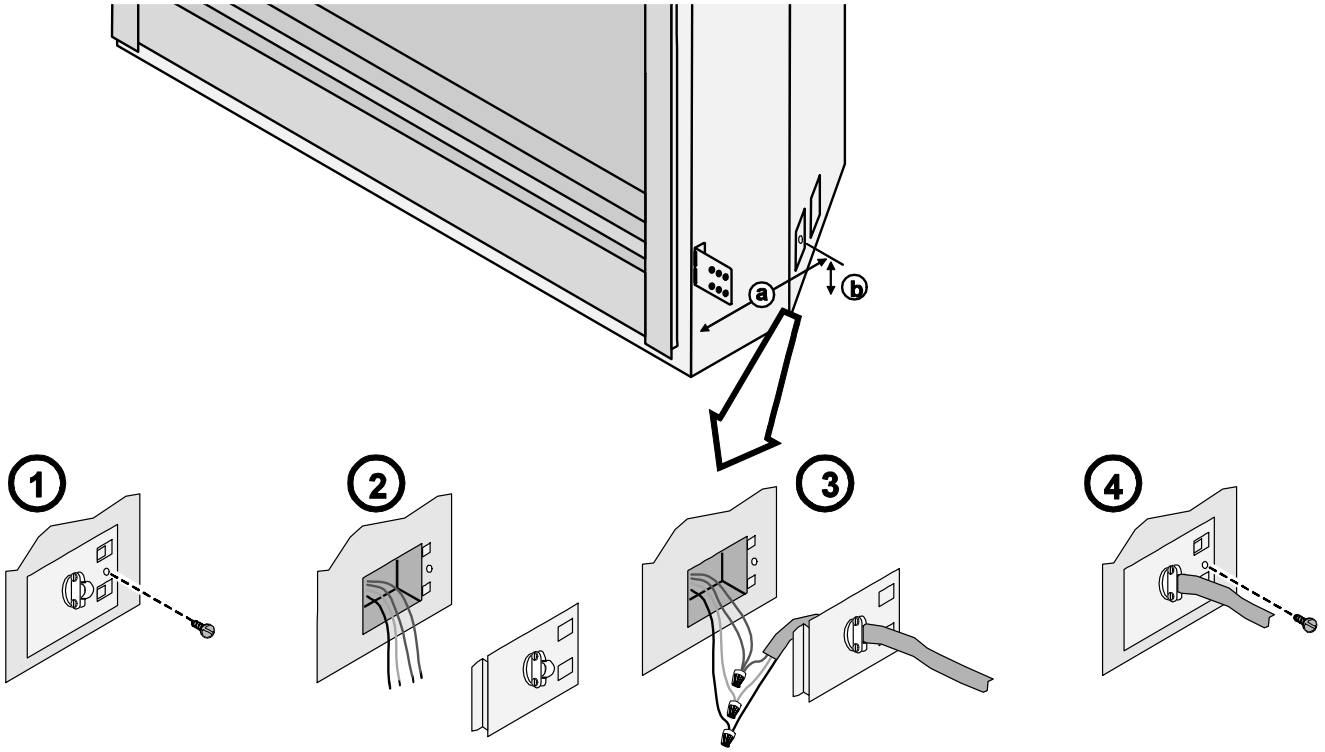

Optional Wall Switch or Thermostat Installation (MV and GSB2 Versions Only)

Do not connect 110-120 VAC to the gas control valve or wiring system of this fireplace. The switch and wiring must be installed by a qualified installer.

This fireplace includes an optional wall switch (with wire) to operate the fireplace burner without accessing the internal on/off switch. A thermostat may be used instead.

Route the wire from inside the fireplace, through the grommet on either side of the fireplace (see illustration to the right) to the switch. The wall switch (or thermostat) may bypass the fireplace on/off switch or be installed in parallel or series configuration (see below).

Caution: Label all wires prior to disconnection when servicing controls. Wiring errors can cause improper and dangerous operation.

Warning: Make sure all wiring is secure and does not contact hot or moving components.

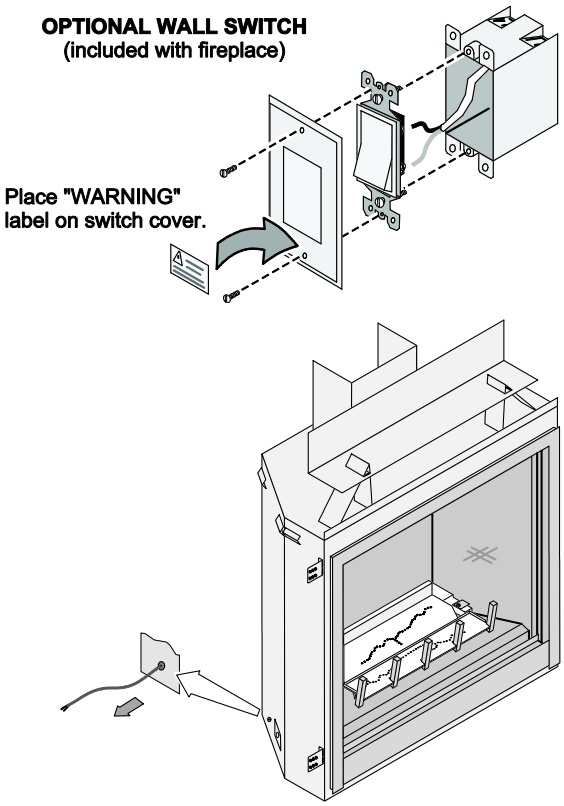

Parallel Connection

	On / Off Switch **ON**	On / Off Switch **OFF**
Thermostat / External Switch **ON**	Heater is **ON**	Heater is **ON**
Thermostat / External Switch **OFF**	Heater is **ON**	Heater is **OFF**

To wire the heater in parallel, follow the directions below:

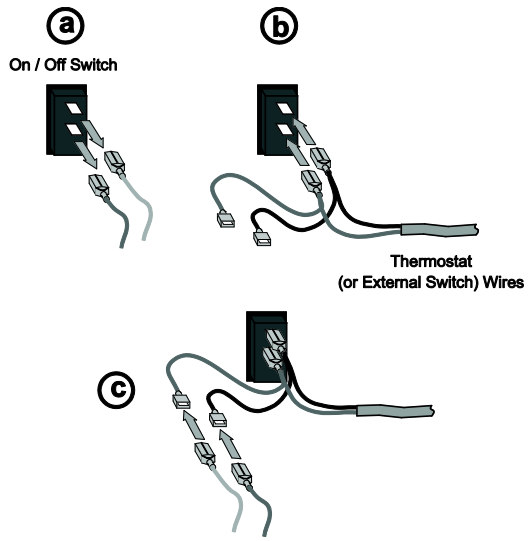

Series Connection

	On / Off Switch **ON**	On / Off Switch **OFF**
Thermostat / External Switch **ON**	Heater is **ON**	Heater is **OFF**
Thermostat / External Switch **OFF**	Heater is **OFF**	Heater is **OFF**

To wire the heater in series, follow the directions below:

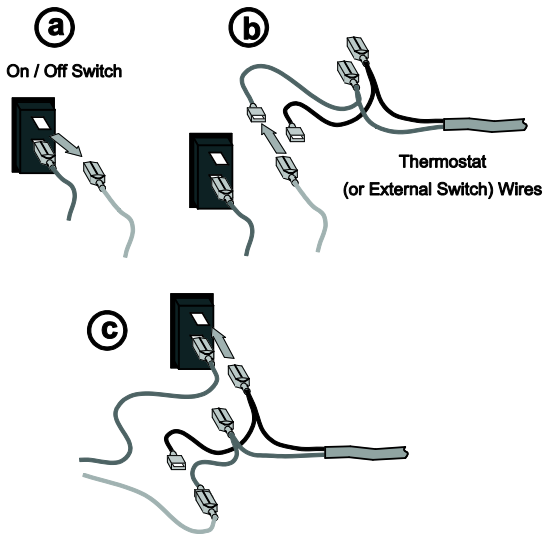

Vent Requirements

- The gas appliance and vent system must be vented directly to the outside of the building, and never be attached to a chimney serving a separate solid fuel or gas-burning appliance. Each direct vent gas appliance must use its own separate vent system.
- In addition to the requirements listed here, follow the requirements provided with the vent.

Drafting Performance

This direct vent appliance requires natural draft to operate (similar to a wood stove or other heating appliance). Draft can be adjusted using the included restrictor. The restrictor settings detailed in the manual should be followed (variations may occur depending upon installation parameters).

Many factors may negatively influence the draft of the appliance. Travis Industries will not be responsible for improper draft due to factors such as trees, hills, buildings, obstructions, excessive wind, extreme hot or cold outdoor temperatures, restrictive vent terminations, or influence from mechanical systems.

Vent Clearances

- The vent must maintain the required clearance to combustible materials to prevent a fire. Do not fill air spaces with insulation.

Minimum Vent Configurations (see page 27)

Minimum Clearance Above Vent	1" (26mm)
Minimum Clearance to Sides & Below Vent	1" (26mm)

NOTE: Make sure to use the included wall thimble with this configuration.

All Other Vent Configurations

Minimum Clearance to Vent	1" (26mm)

Vent Firestop or Thimble

- A firestop or thimble is required whenever the vent penetrates a wall, floor, or ceiling (passes through framing members). See vent charts on page 27 and 29 for details

Altitude Considerations

- This heater complies with CSA 2.17-2017 “Gas-Fired appliances for use at high altitudes”. This heater has been tested at altitudes ranging from sea level to 4,800 feet (1370 M). In this testing we have found that the heater, with its standard orifice, burns correctly with just an air shutter adjustment.
- Failure to adjust the air shutter properly may lead to improper combustion which can create a safety hazard. Consult your dealer or installer if you suspect an improperly adjusted air shutter.

Approved Termination

- Always use the high-wind cap (part # 46DVA-HC, 58DVA-HC, 46DVA-VCH, or 58DVA-VCH).
  The **high-wind sconce cap is not allowed**.

Approved Vent

- Installation instructions for Simpson Dura-Vent may be found at www.duravent.com.

Minimum Vent Configurations (see page 27)

Use 8" diameter Simpson Dura-Vent Model Direct-Vent Pro (or GS)*.

All Other Vent Configurations

Use 8" or 6-5/8” diameter Simpson Dura-Vent Model Direct-Vent Pro (or GS)* (see vent configuration for details).

* Other vent may be approved with this fireplace. Check with the vent manufacturer for details).

Vent Installation

- Slide the vent sections together and turn 1/4 turn until the sections lock in place.
- Screws are not required to secure the vent. However, three screws may be used to secure vent sections together if desired.
- High temperature sealant is recommended at the appliance starter section connection (use high-temperature silicone or Mill-Pac®).
- If disassembly is required, at time of re-assembly check to see if the vent creates a tight fit. If it does not, apply high temperature sealant to the joints of the affected sections.
- Horizontal sections require a 1/4" (6mm) rise every 12" (305mm) of travel.
- Horizontal sections require non-combustible support every three feet (e.g.: plumbing strap).
- Vent termination must not be located where it can become plugged by snow or other material.
- Use the vinyl siding standoff when installing on a structure with vinyl siding.
- Venting termination shall not be recessed into a wall or siding.

Exhaust Restrictor Position

- An exhaust restrictor is built into the appliance to adjust the flow rate of exhaust gases. Depending upon the vent configuration, you may be required to adjust the restrictor position. The charts for vent configurations detail the correct restrictor position.

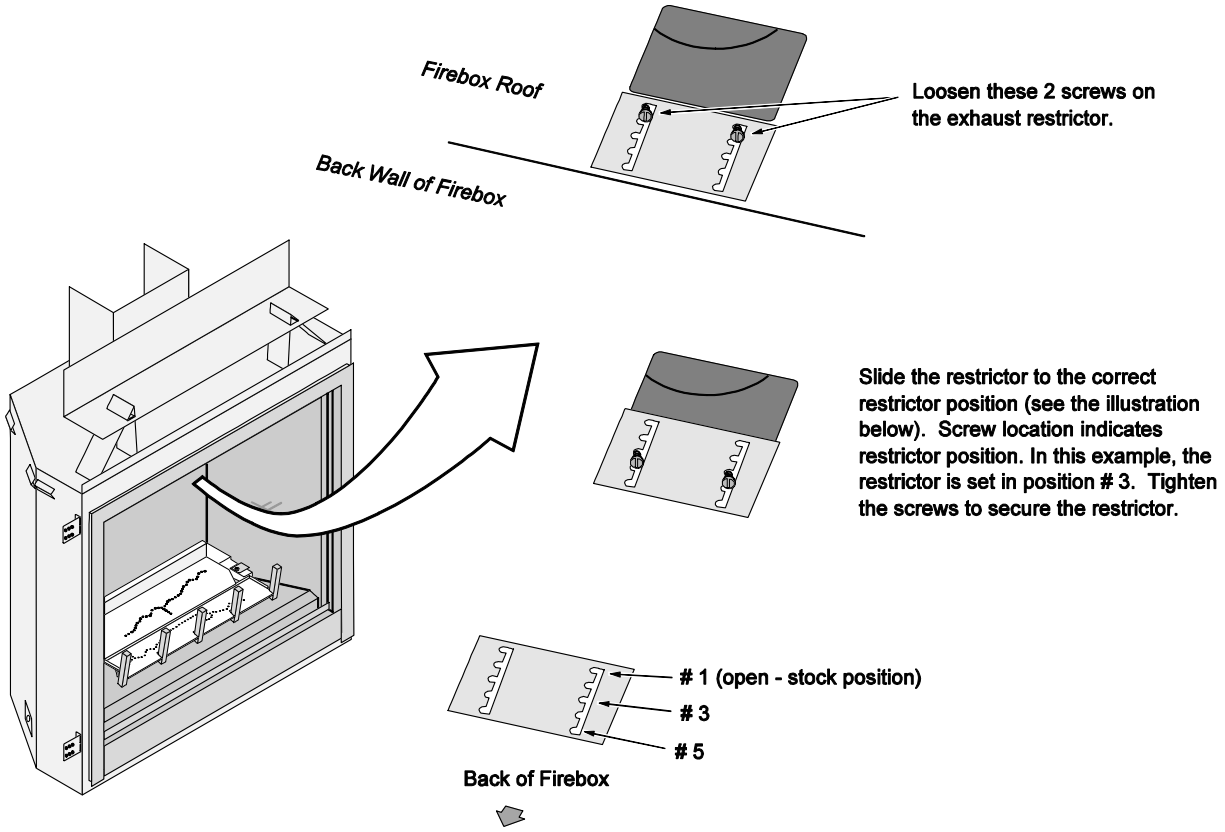

Diffuser

- A diffuser is built into the appliance to adjust the flow rate of exhaust gases. Depending upon the vent configuration, you may be required to adjust the diffuser to the open position (see illustration below). The charts for vent configurations detail the correct diffuser position.

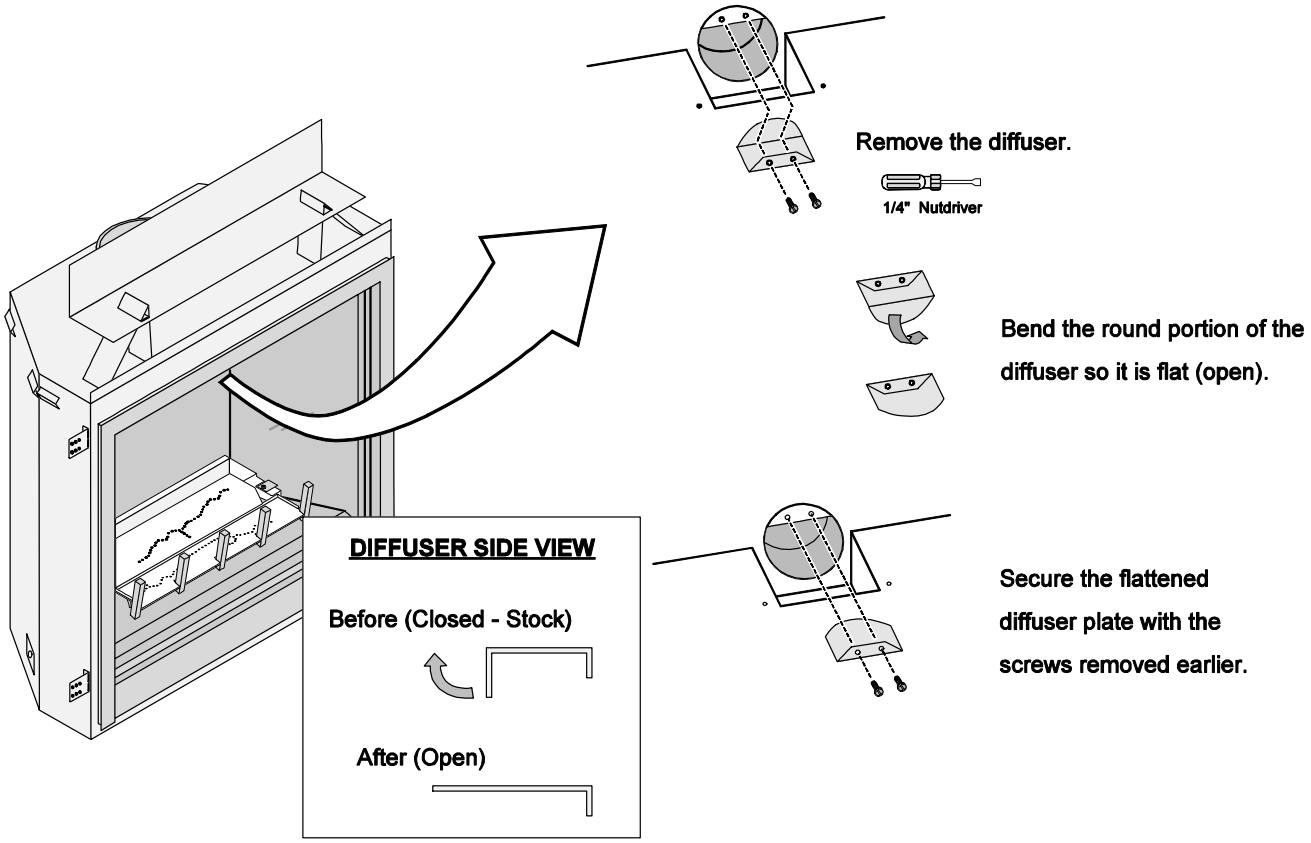

Vent Configurations

Minimum Vent Configuration

- **Use 5x8" Diameter Coaxial Vent**
- **NOTE**: Use the included thimble assembly whenever passing through a wall. (use on front and back of wall penetration). See picture below.
- The termination must fall within the shaded area shown in the chart. Use the indicated restrictor positions.
- One (30° or 45°) elbow may be used on the horizontal run.
- **HINT**: Use minimum vent kit "H" (96200332) from Travis Industries (additional vent may be required).

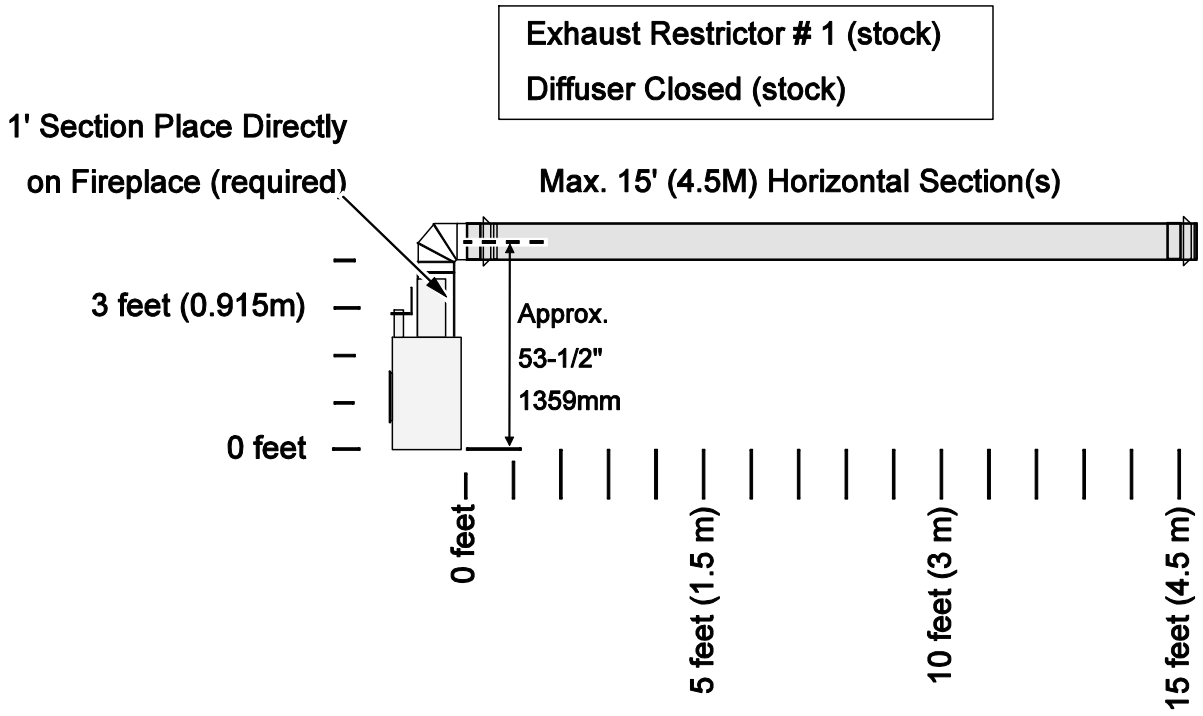

Use the included wall thimble when penetrating a wall. Part #96200101

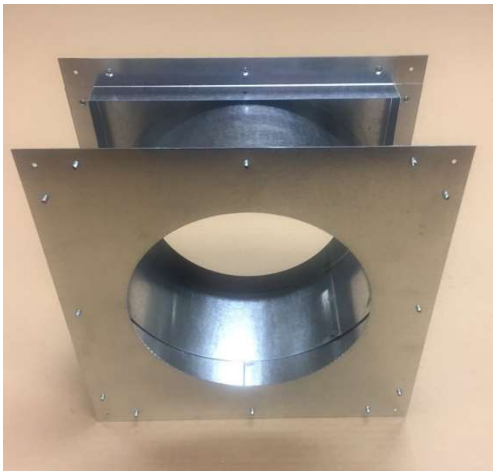

Vent Configuration: Vertical Termination

- **<u>Use 4x6-5/8" Diameter Coaxial Vent. Connect a 8" to 6-5/8" reducer directly to the fireplace (sku 98900165).</u>**
- **<u>NOTE</u>**: The included thimble assembly is not required and may be discarded.
- The termination must fall within the shaded area shown in the chart. Use the indicated restrictor positions.
- Up to four elbows (30°, 45°, 60° or 90°) may be used. Only one horizontal elbow may be used.

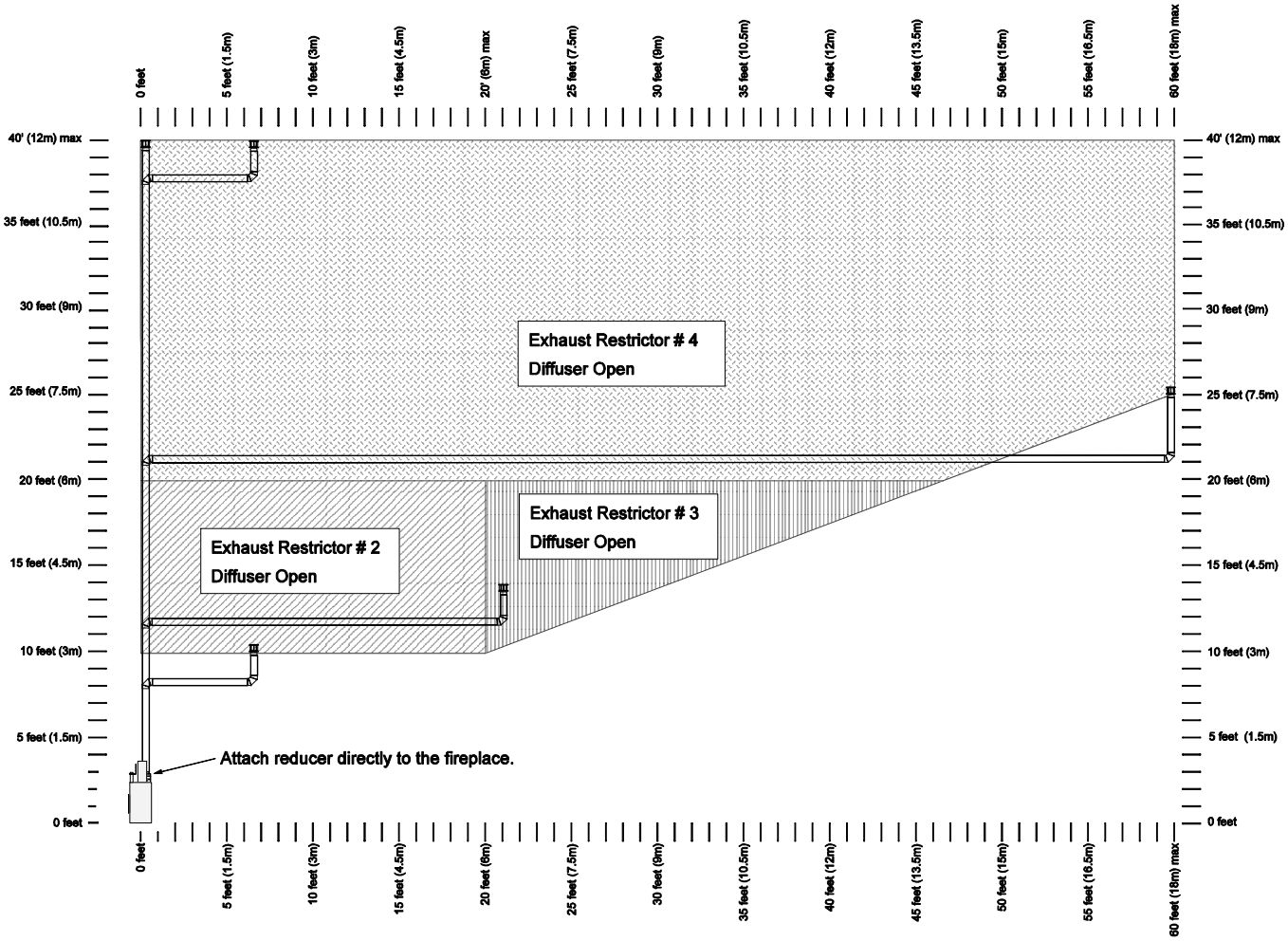

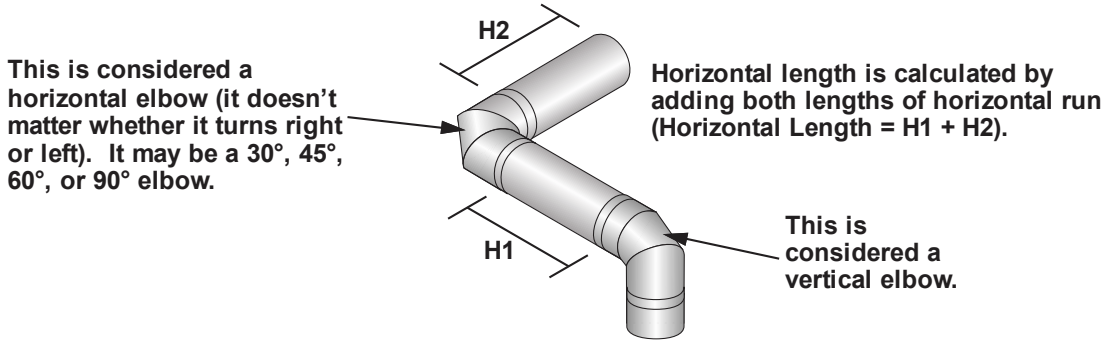

Vent Configuration: Horizontal Termination with Vertical Rise

- **Vent configurations 15' or above (from the base of the fireplace) use 6-5/8" dia. vent. Connect a 8" to 6-5/8" reducer directly to the fireplace (98900165).**

  NOTE: For this configuration, the included thimble assembly is not required and may be discarded.
- **Vent configurations under 15' (from the base of the fireplace) use 8" dia. Vent.**

  NOTE: For this configuration, the included thimble assembly may be used or use a firestop (not included).
- The termination must fall within the shaded area shown in the chart. Use the indicated restrictor positions.
- Up to four elbows (30°, 45°, 60° or 90°) may be used. Only one horizontal elbow may be used.

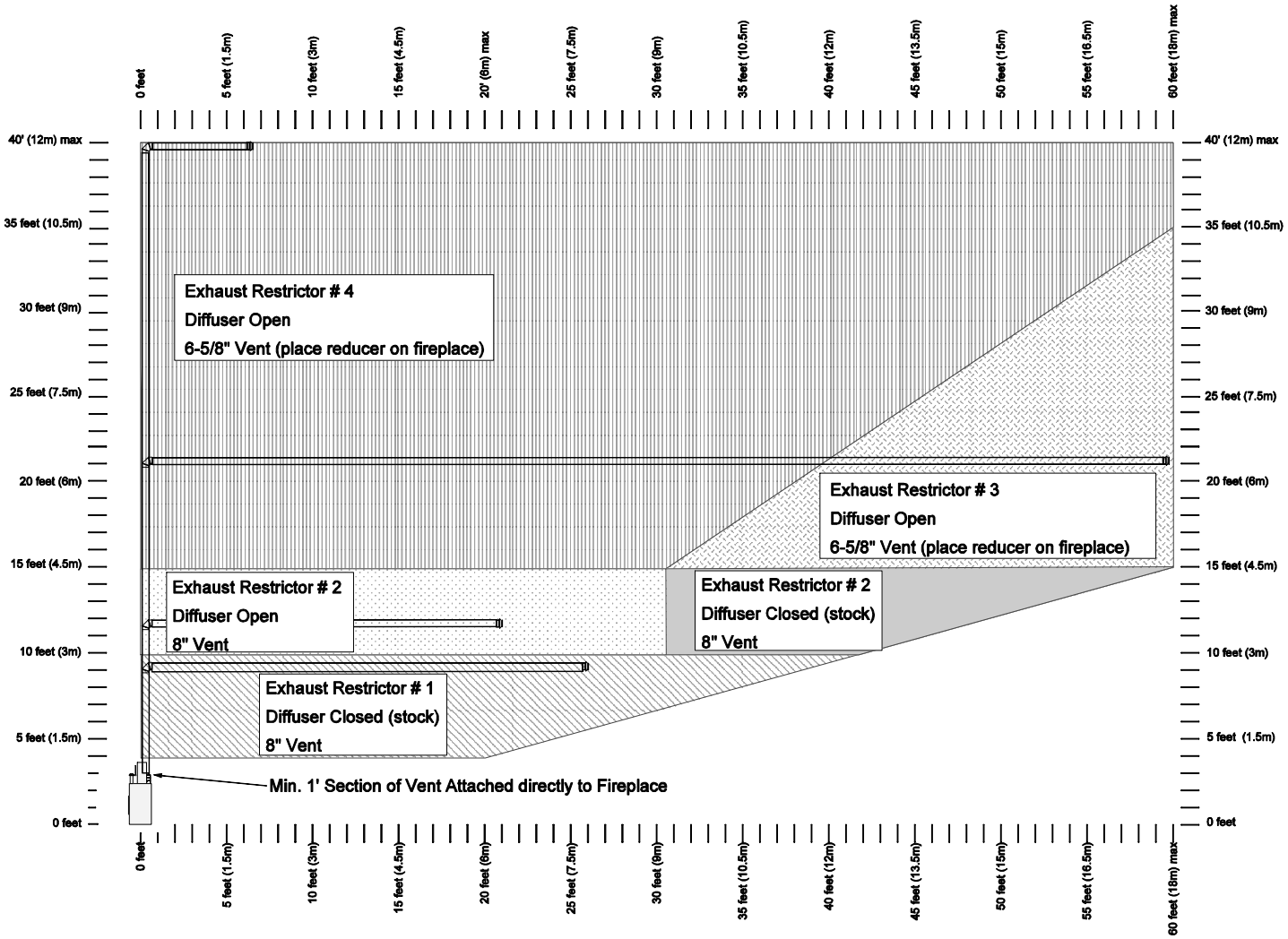

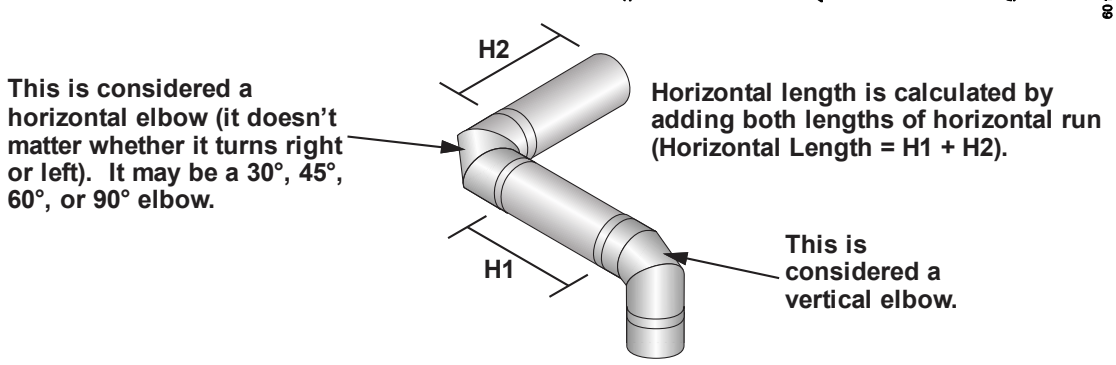

Masonry Chimney Conversions

This appliance may utilize 6-5/8" diameter direct vent manufactured by Duravent (reducer may be required). The vent may be adapted to utilize an existing masonry fireplace using the Duravent Co-Linear Adapter (46DVA-GCL or TCL). The vent must be installed following all directions included with the vent and those listed below:

- All requirements in the appliance manual must be met. This includes compliance with vent configuration charts.
- The restrictor position should be set to the position that most closely resembles the vent configuration. NOTE: because this installation utilizes non-standard vent, the restrictor position may vary. Carefully monitor the burn characteristics to verify correct restrictor position.
- The UL gas liner must only be run through the fireplace/chimney (entire length of liner must be retained within the fireplace/chimney). Do not run the liner near combustibles.

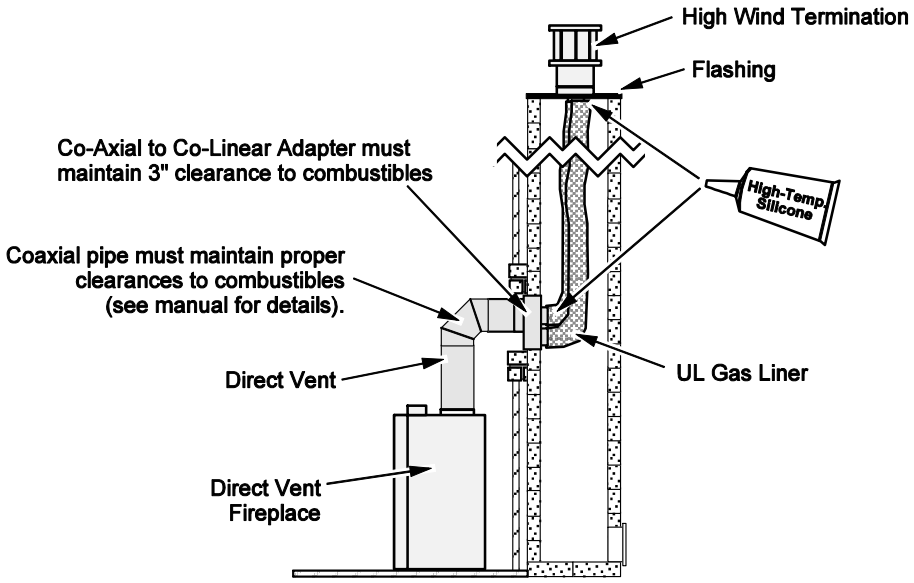

This appliance may utilize 6-5/8" diameter direct vent manufactured by Duravent (reducer may be required). The vent may be adapted to utilize an existing masonry fireplace using the Duravent Masonry Chimney Conversion Kit (part # 46DVA-KMC). The vent must be installed following all directions included with the vent and those listed below:

NOTE: Before proceeding with the following installation example, check with the local building jurisdiction to verify that this type of installation is allowed in your area.

- All requirements in the appliance manual must be met. This includes compliance with vent configuration charts.
- The restrictor position should be set to the position that most closely resembles the vent configuration. NOTE: because this installation utilizes non-standard vent, the restrictor position may vary. Carefully monitor the burn characteristics to verify correct restrictor position.
- The UL gas liner must only be run through the fireplace/chimney (entire length of liner must be retained within the fireplace/chimney). Do not run the liner near combustibles.

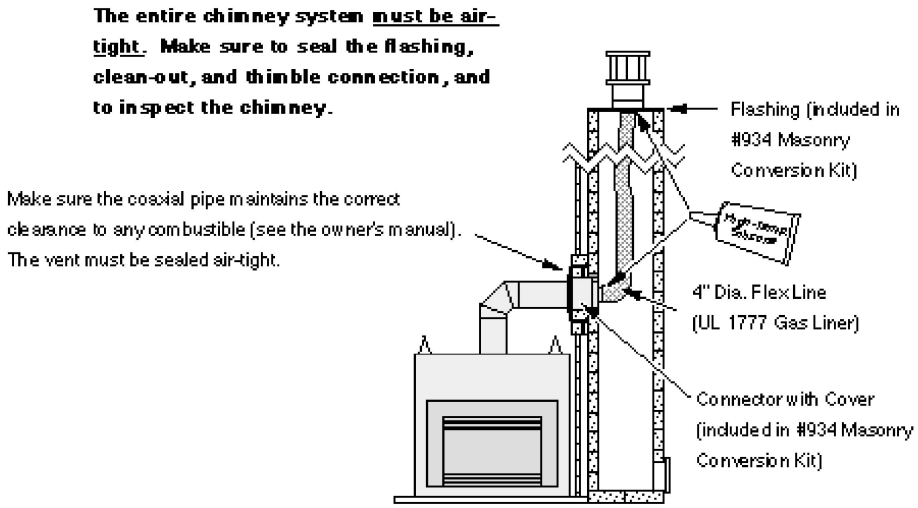

Class A Chimney Conversion

Duravent provides a conversion kit for those wishing to use an existing class A chimney to vent this direct fireplace. The illustration below gives an overview of this type of installation. See the instructions included with the kit for details.

- All requirements in the appliance manual must be met. This includes compliance with vent configuration charts.. Remember to set the restrictor position to the correct position (based upon the vertical rise height - see the vent charts in the appliance manual.
- These conversion kits does not work on interior masonry chimneys.
- The measurements below refer to the Chimney Inside Diameter

Chimney Conversion Kit A (46DVA-KCA)
6” DuraTech
6” Security Chimney
6” Metalbestos
6” Jackes-Evans
6” Hart & Cooley
6” Pro-Jet

Chimney Conversion Kit B (46DVA-KCB)
6” DuraPlus
7”-8” DuraTech
8” Security Chimneys
7”-8” Metalbestos
7”-8”Jackes-Evans
7”-8”Hart & Cooley
7”-8”Pro-Jet
6”-7” Amer. Metals
6”-7”Metal-Fab
6” Air-Jet

Chimney Conversion Kit C (46DVA-KCC)
7”-8” DuraPlus
8” American Metals
8” Air-Jet
8” Metal-Fab

Each Kit Contains:
Cap Adapter
Retro Connector

Additional Required Equipment:
4" Flex (#711 or U.L. 1777)
Termination (46DVA-VCH)
Co-Axial Sections

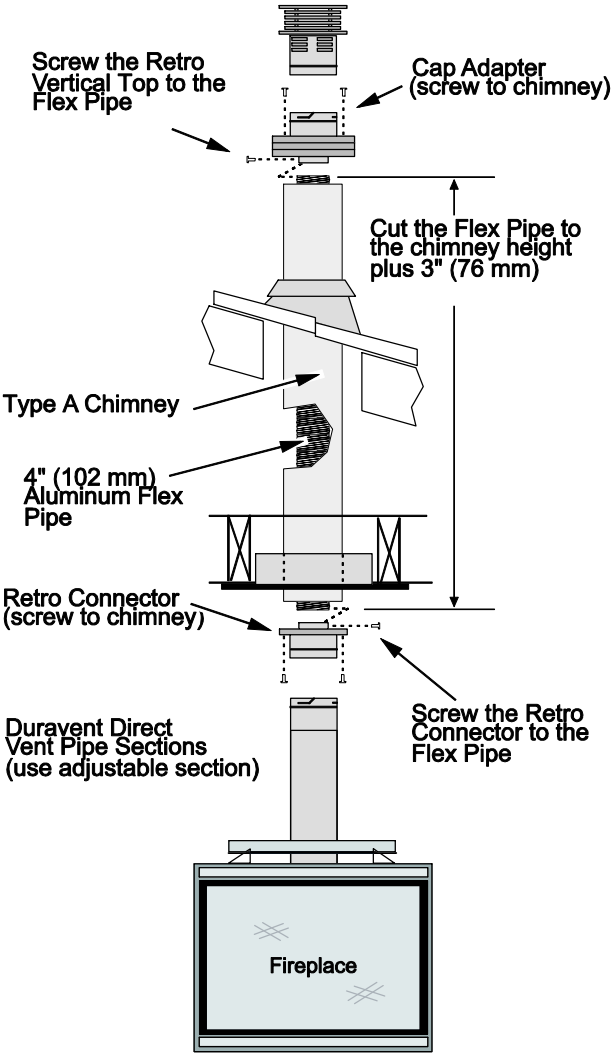

Termination Requirements

! Venting terminals shall not be recessed into a wall or siding.

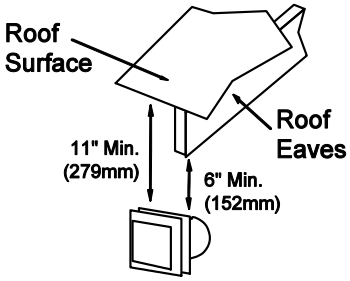

A Minimum 9" (229mm) clearance from any door or window

B Minimum 12" (305mm) above any grade, veranda, porch, deck or balcony

C Minimum 1" (25mm) from outside corner walls
NOTE: Clearance in accordance with local installation codes and the requirements of the gas supplier.

D Minimum 1" (25mm) from inside corner walls
NOTE: Clearance in accordance with local installation codes and the requirements of the gas supplier.

E Minimum 11" (279mm) clearance below unventilated soffits or roof surfaces
Minimum 18" (457mm) clearance below ventilated soffits
Minimum 6" (152mm) clearance below roof eaves
NOTE: Vinyl surfaces require 24" (610mm)
NOTE: Clearance in accordance with local installation codes and the requirements of the gas supplier.

F Minimum 12" (305mm) clearance below a veranda, porch, deck or balcony
NOTE: Permitted only if veranda, porch, deck, or balcony is fully open on a minimum of two sides beneath the floor.
NOTE: Clearance in accordance with local installation codes and the requirements of the gas supplier.

G Minimum 48" (1219mm) clearance from any adjacent building

H Minimum 84" (2134mm) clearance above any grade when adjacent to public walkways or driveways
NOTE: may not be used over a walkway or driveway shared by an adjacent building

I Minimum 9" (229mm) clearance to any non-mechanical air supply inlet to the building or the combustion air inlet to any other appliance.

J Minimum 36" (914mm) clearance above any mechanical air supply inlet if within 10’ (3M) horizontally

K Minimum 36" (914mm) from the area above the meter/regulator (vent outlet) - this extends 15’ (4.5M) above the regulator
NOTE: Clearance in accordance with local installation codes and the requirements of the gas supplier.

L Minimum 36" (914mm) from the meter/regulator (vent outlet)
NOTE: Clearance in accordance with local installation codes and the requirements of the gas supplier.

M Minimum 12” (305mm) above the roof line (for vertical terminations)

N Minimum 24” (610mm) horizontal clearance to any surface (such as an exterior wall) – for vertical terminations

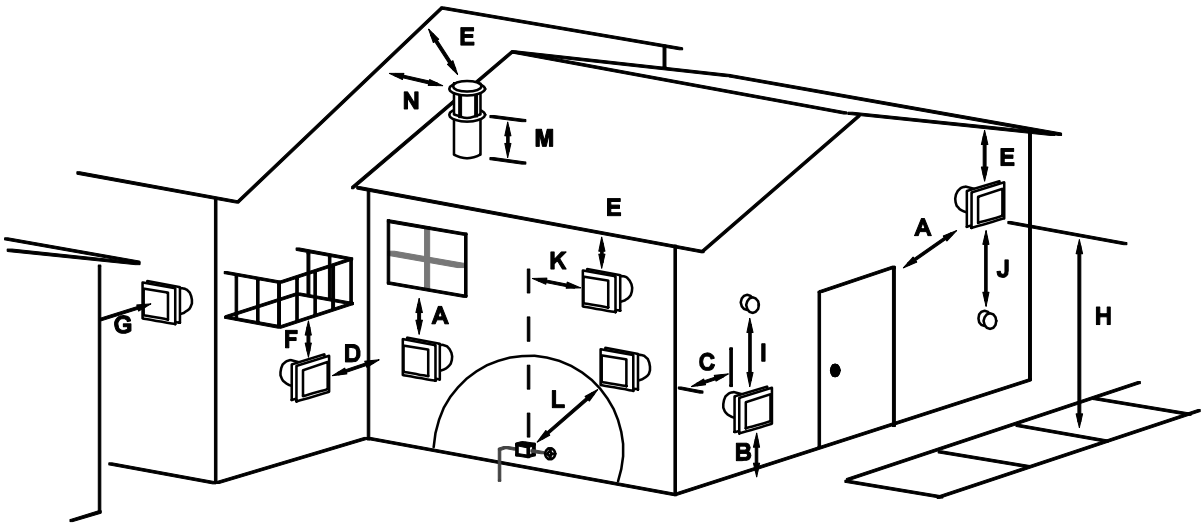

NOTE: Measure clearances to the nearest edge of the exhaust hood.

Hearth Requirements

- A non-combustible hearth is not required. Any material (combustible or non-combustible) must not extend more than 1” above the base of the fireplace (see illustration below).

WARNING: A non-combustible hearth is not required in front of the fireplace. However, if the fireplace is installed next to the floor, we recommend a hearth to protect the flooring surface from discoloration or other negative impacts from the heater.

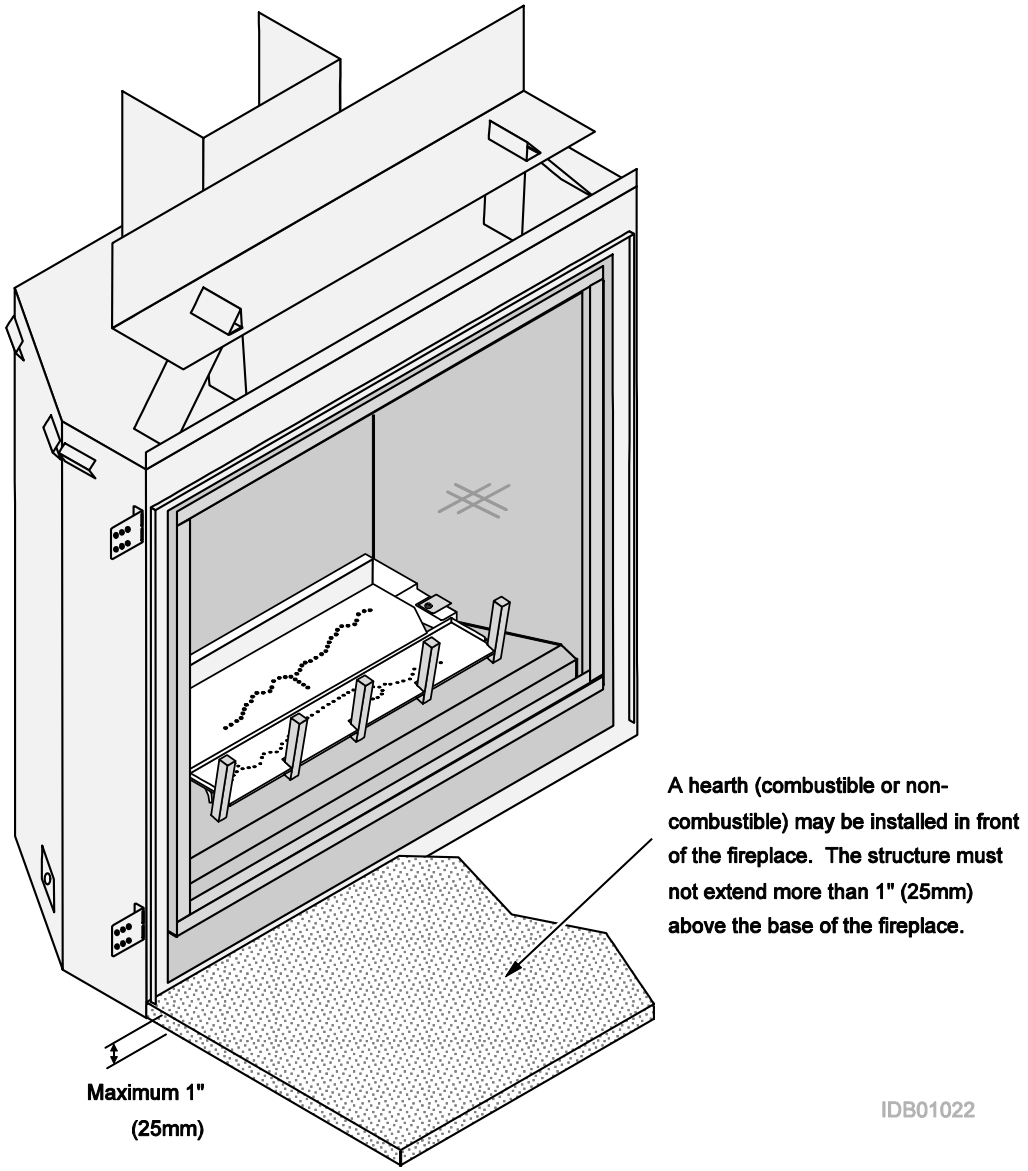

Facing Requirements

- Non-combustible facing must extend from 1” above the base of the fireplace to the framing header (see illustration below for details).
- Non-combustible facing must extend the entire width of the unit to the framing opening on both sides (see illustration below for details).
- Do not place facing over the glass opening.
  WARNING: **Do not place drywall or other combustibles over the front of the fireplace.**

WARNING: Do not use adhesive to secure the facing. The high temperatures of the fireplace may cause adhesives to emit odors. Use mastic or thin set (or other non-combustible, non-odorous adherent) to attach the facing.

NOTE: Screws may be used to secure cement board or tile backer to the fireplace. Do not penetrate the fireplace more than 1/2” (13mm).

1/8" (3mm) Gap

Make sure non-combustible board is cut and positioned so it maintains a 1/8" (3mm) gap from the tile stop. This allows the fireplace structure to expand without cracking the facing (see dimensions below).

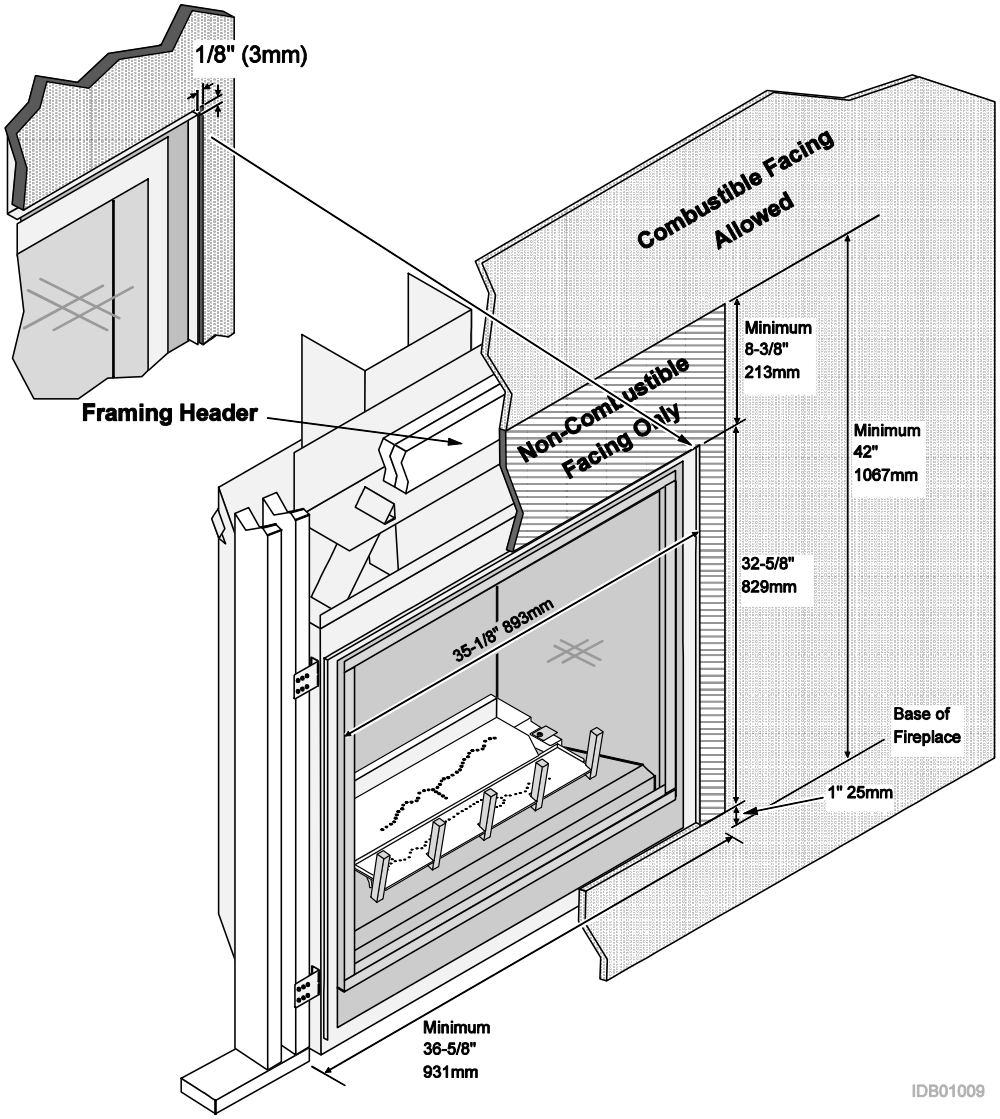

Standard vs. Extended Position

- The nailing brackets on the side of the fireplace may be placed in the standard or extended position to best suit the facing being used (the header shield is also moved). Most installations use the standard nailing bracket position. If using a facing that does not use a backing board (e.g. marble), you may wish to use the extended position.

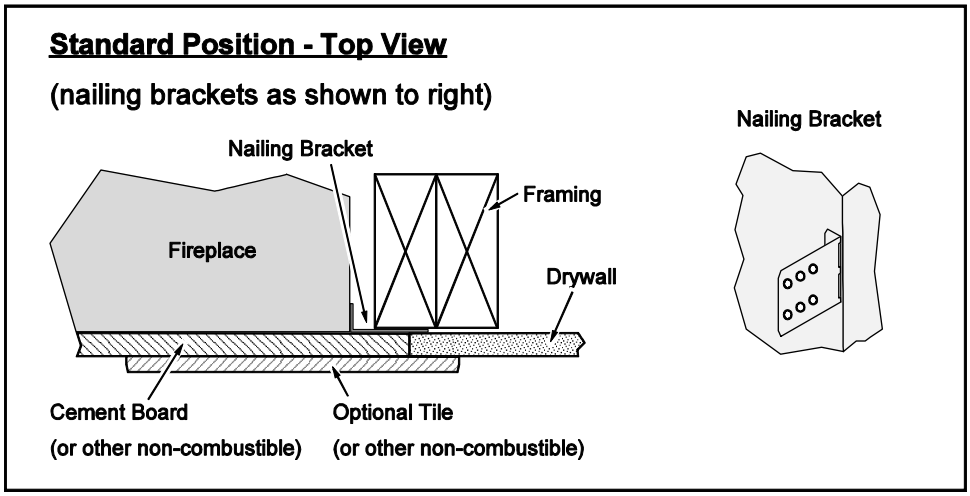

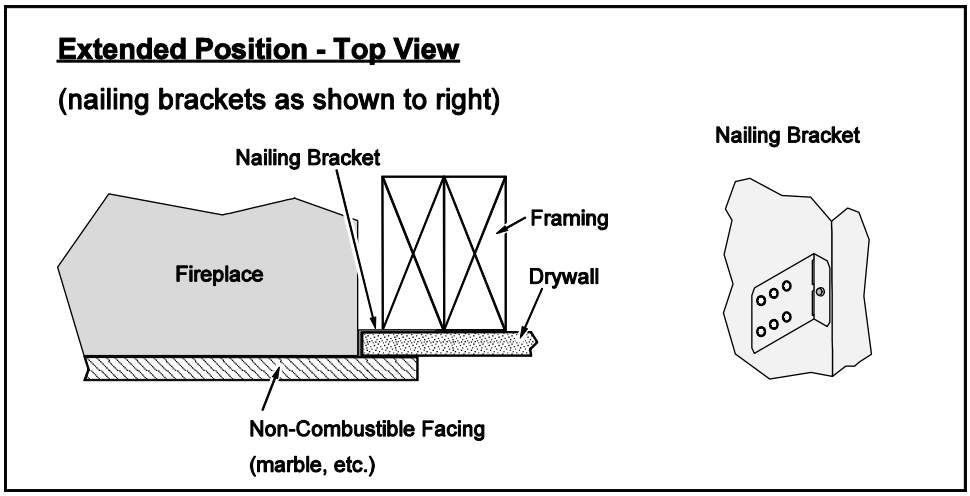

Thick Facing Guide

The thick facing guide is shipped pre-attached to the fireplace.

- Thick Facing - If using thick facing, leave the guide in place (see “Thick Facing” on the following page).

- Thin Facing - If using thin facing, you may remove the thick facing guide following the directions below (see “Thin Facing” for details). NOTE: You may leave the thick facing guide in place – it will appear as a black border around the screen assembly.

Removing the Thick Facing Guide

The thick facing guide consists of 4 sheet-metal strips behind the screen assembly. Remove the screen assembly to access the guide. Unscrew the screws holding the pieces in place (see illustration below). NOTE: The top piece is different than the bottom and has the letter “T” cut into it.

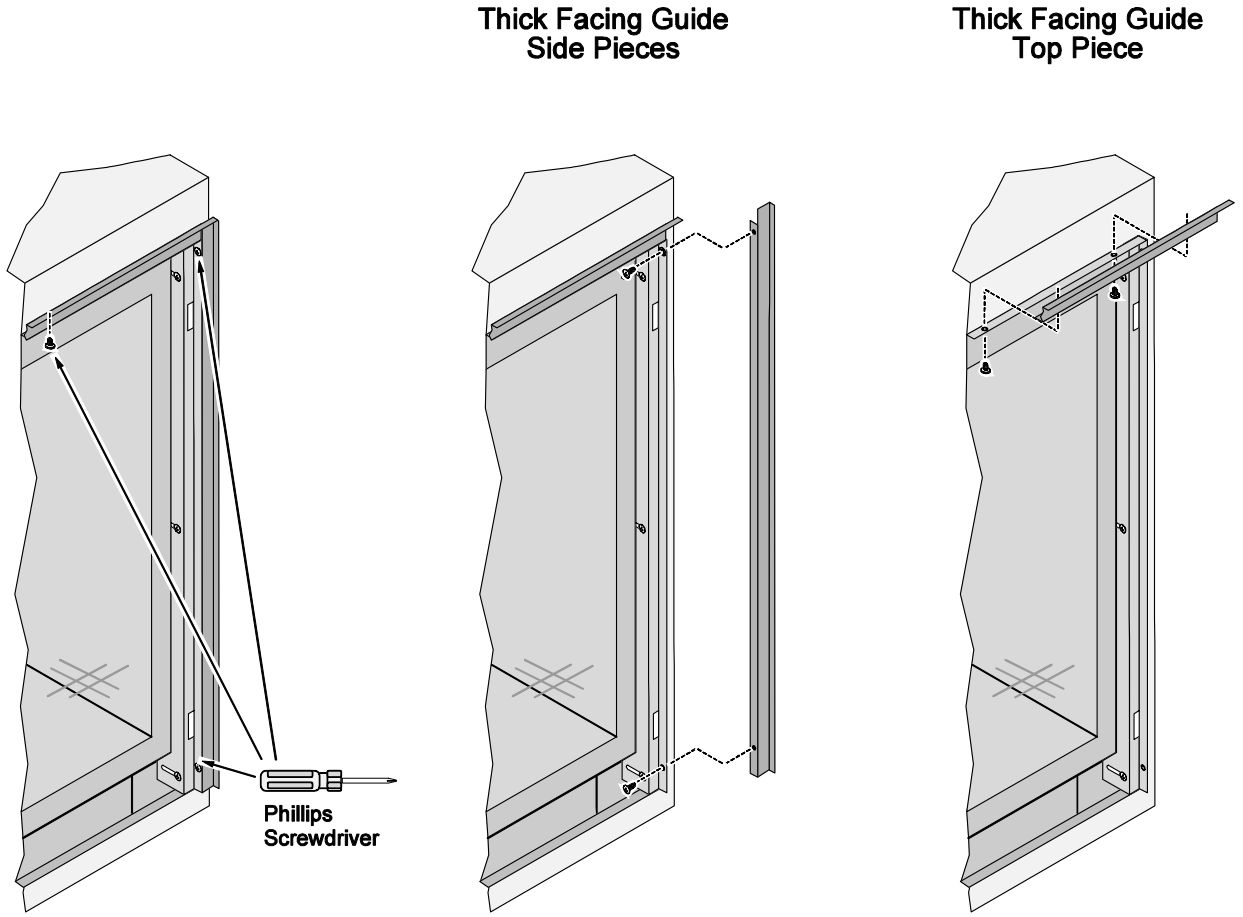

The thick facing guide may be removed after facing is installed.

Thick Facing (Facing Thicker than 1-1/2”)

If using thick facing, make sure to leave the thick facing guide in place.

Make sure to leave the screen assembly in the stock (fully in) position.

You may leave the screen assembly in place while installing thick facing. You may wish to protect it with plastic (or other suitable material) to repel debris.

When using thick facing, make sure to install the facing above, below, and to the sides of the thick facing guide. Do not allow any facing material to overlap the thick facing guide (this would prevent removal of the screen assembly).

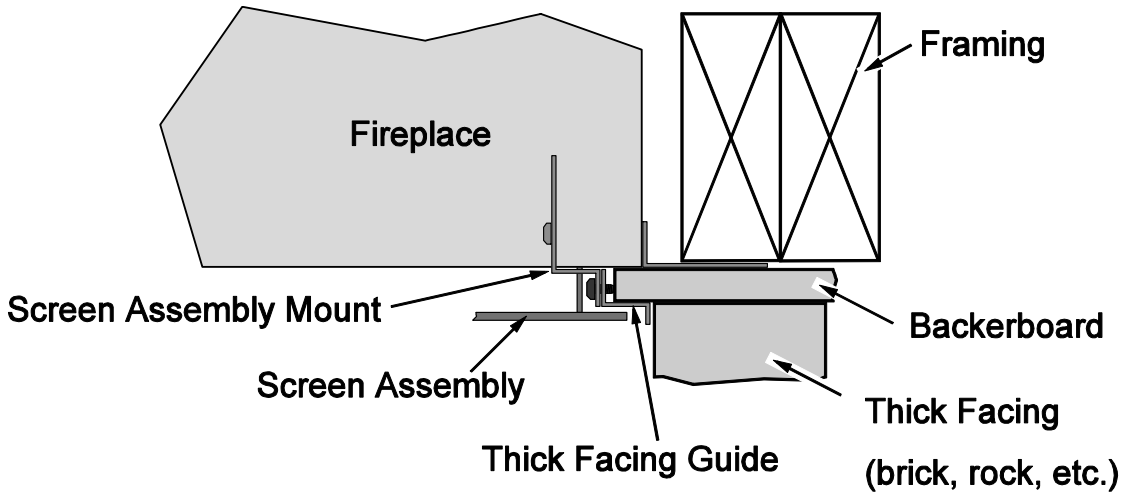

THICK FACING GUIDE SIZE

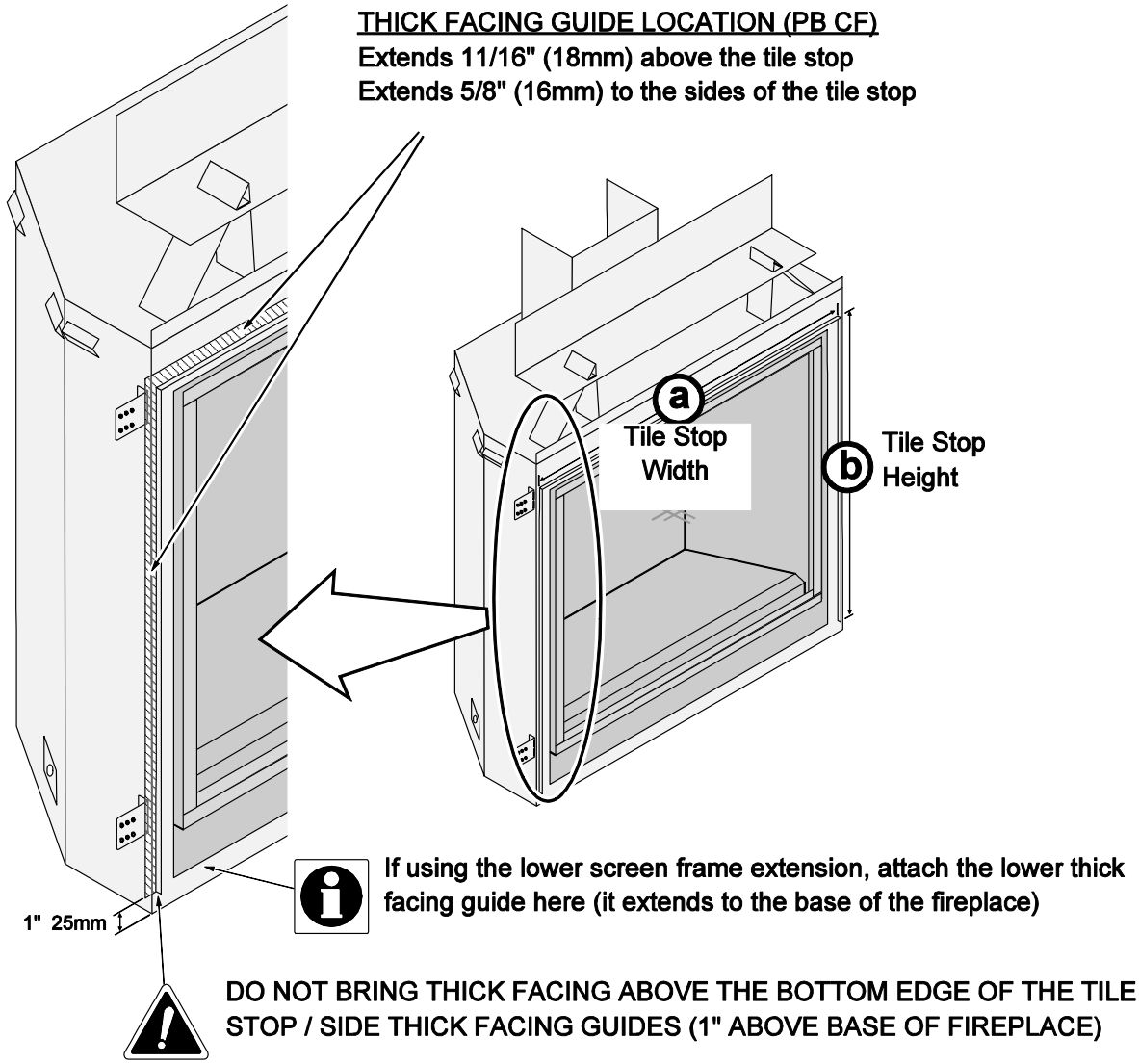

	Tile Stop Width (a)	Tile Stop Height (b)
PB36 CF	35-1/8” (893mm)	32-5/8” (829mm)

Thin Facing (1/2” to 1-1/2”)

When using thin facing you may remove the thick facing guide and tuck the facing underneath the screen assembly. The screen assembly mounts may be adjusted to position the screen assembly directly against the facing (see “Screen Assembly Mounts” below). To further illustrate this, note how the screen assembly mount is moved forward in the 1” facing example below).

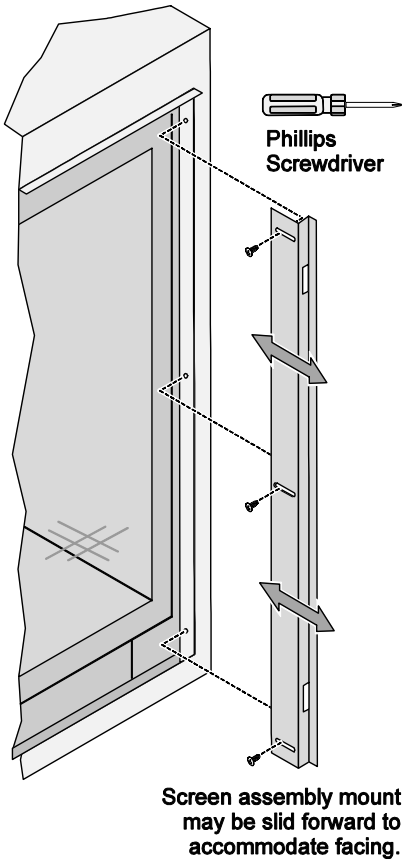

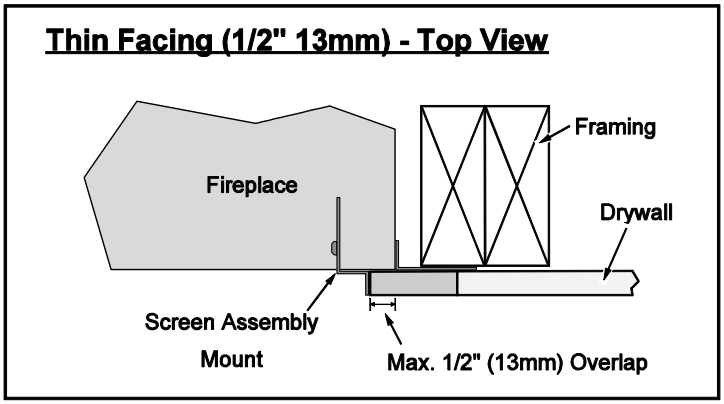

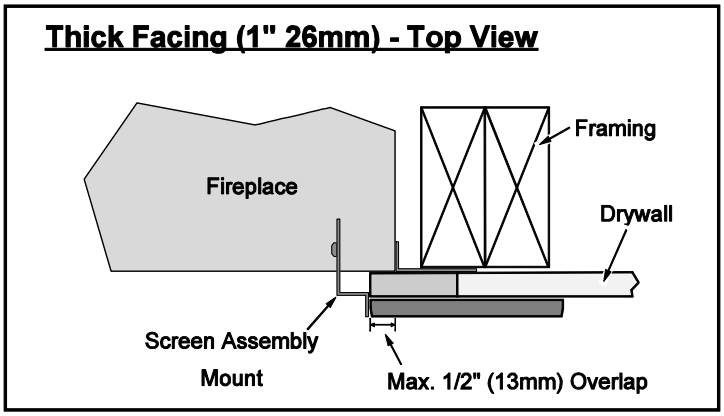

Screen Assembly Mounts

The screen assembly mounts (located on outer front edges of the fireplace) are adjustable to allow the screen assembly to be positioned 1/2" (12mm) to 1-1/2” (38mm) from the front of the fireplace. This allows facing to tuck under the screen assembly. Each mount is held in place by (3) Philips head screws. Before mounting the screen assembly, adjust the mounts so that the front edge is flush with the finish material surrounding the fireplace. To adjust the mounts, loosen the screws, slide the mounts to the desired position, and then tighten the screws.

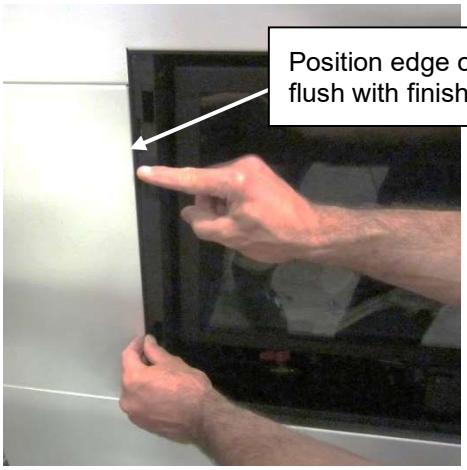

Mantel Requirements

- Use the table below to determine the maximum mantel depth allowed. The mantel depth (measured from the non-combustible facing) must fall within the shaded portion of the table.
- Any material above the fireplace that protrudes more than 3/4” (19mm) from the non-combustible facing is considered a mantel and must meet the mantel requirements.

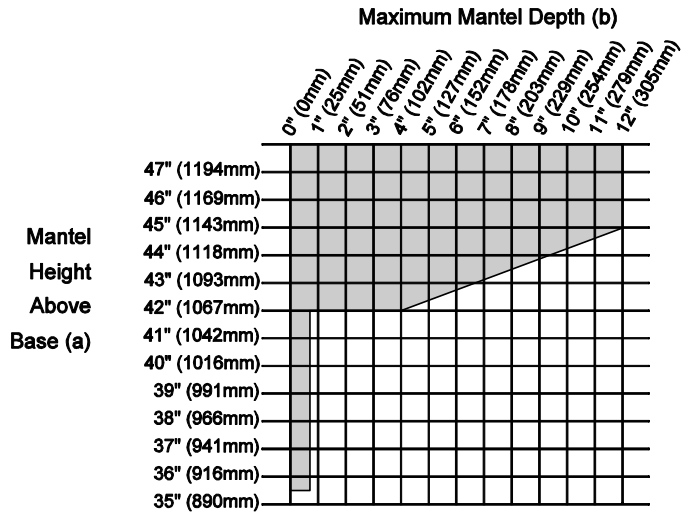

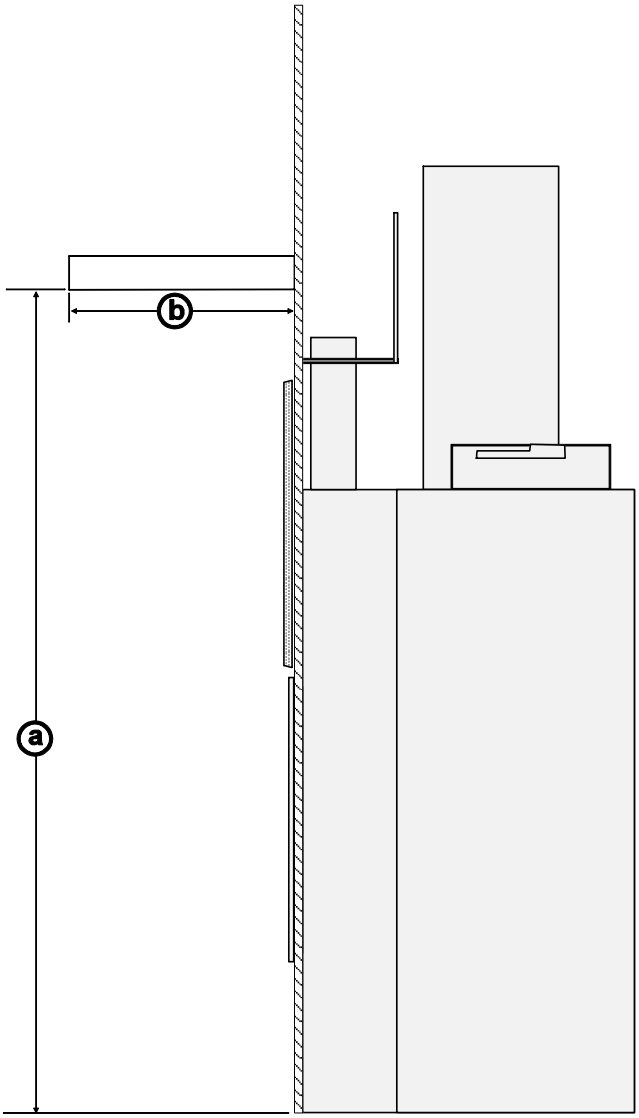

Mantel Column Clearances

- Combustible mantel columns (legs) require a 0” (0mm) clearance to the side of the fireplace (they must be to the side of the fireplace).
- Non-combustible mantel columns do not have a minimum clearance.

Use of a Non-Combustible Mantel Below Listed Mantel Clearances

Each gas fireplace has a unique set of mantel requirements. If you wish to place a non-combustible mantel at a lesser height than specified in this manual, it will need to meet the following requirements:

- The header (the framing member above the fireplace opening) must be non-combustible.
- The facing must be non-combustible and extend to the header (or mantel, whichever is greater). The facing must also span the entire width of the mantel.
- See the illustration below for additional requirements.

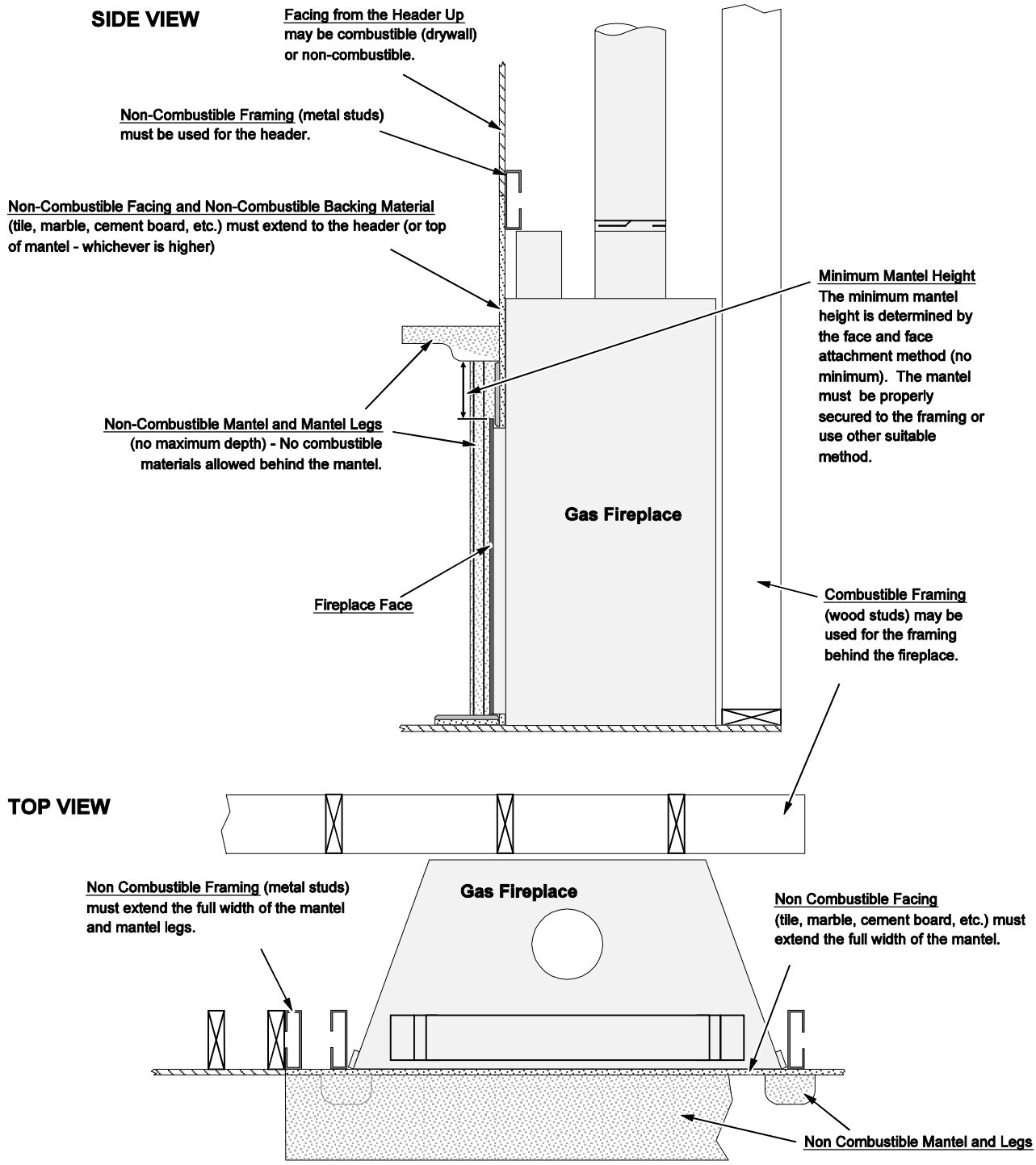

Finalizing the Installation

1. Remove the glass (see page 48).
   NOTE: If using propane (LP) convert the appliance prior to installing the media.
2. We recommend you purge the gas line at this time (**with the glass removed**). This allows gas to be detected once it enters the firebox, ensuring gas does not build up.

GSB2 Versions Only

Install the batteries into the battery holder

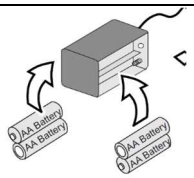

GSR2 Versions Only

Install the batteries into the battery box and remote.

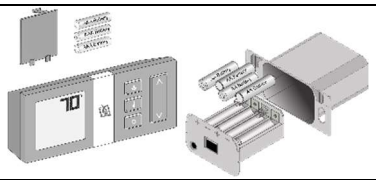

3. Turn on gas to the heater. Leak test all gas joints prior to starting the appliance. Start the pilot to verify gas supply (see instructions on page 44). Leak test all the gas joints. Turn the gas control knob to "OFF" to shut off the appliance.

MV Units Only - Pilot Flame Inspection - (see instructions on page 45)

The pilot flame should look like the illustration below. Adjust the pilot flame if necessary.

To adjust the pilot flame, turn this screw (NOTE: if totally unscrewed gas will come out of this port). Clockwise lowers the flame while counter-clockwise raises it.

Standard Screwdriver

The pilot flame should touch only the top 3/8Ó(9mm) of the thermopile. Adjust the pilot up or down as necessary.

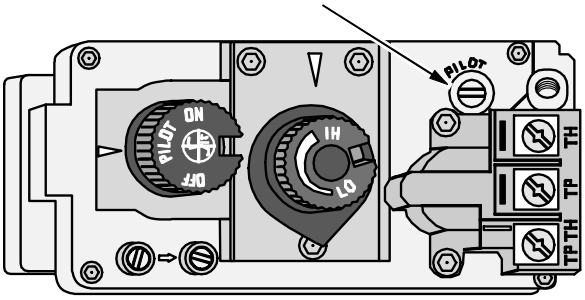

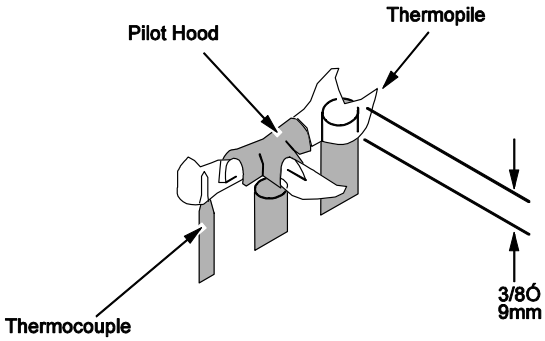

GSB2 Units Only - Pilot Flame Inspection - (see instructions on page 45)

The pilot flame should look like the illustration below. Adjust the pilot flame if necessary.

The pilot flame should look like the illustration below. Adjust the pilot flame if necessary.

To adjust the pilot flame, turn this screw. Clockwise lowers the flame while counter-clockwise raises it

Standard Screwdriver

The pilot flame should touch the top 3/8" of th sensing electrode and make contact with the hood. Adjust the pilot up or down as necessa

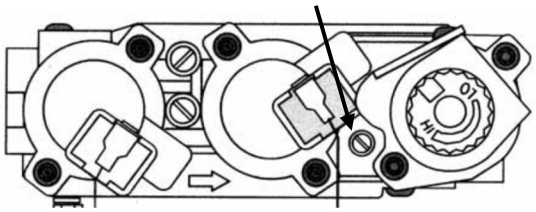

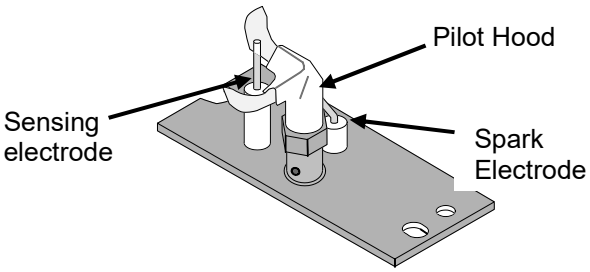

4. Replace the glass.

5. Start the main burner and verify the burner ignites correctly.

6. Leak test all gas joints.

Air Shutter Adjustment

Let the heater burn for fifteen minutes (make sure the logs and glass are in place). The flames should be yellow with no sooting. Adjust the air shutter, if necessary, to achieve the correct looking flame.

Air Shutter Adjustment

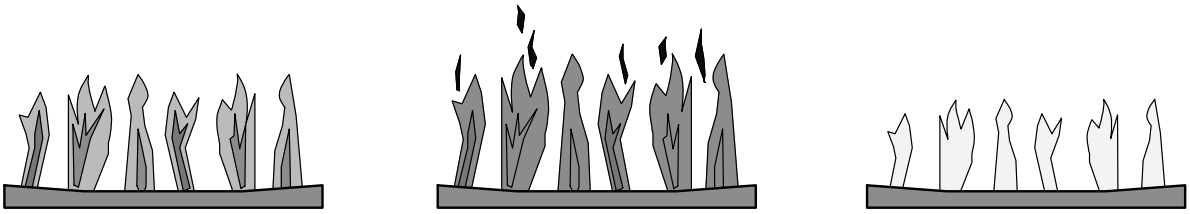

Correct

Flames should be blue at the base, yellow-orange on the top.

Not Enough Air

If the flames are too tall or sooty on the ends, open the air shutter.

Too Much Air

If the flames are all blue and short, close the air shutter.

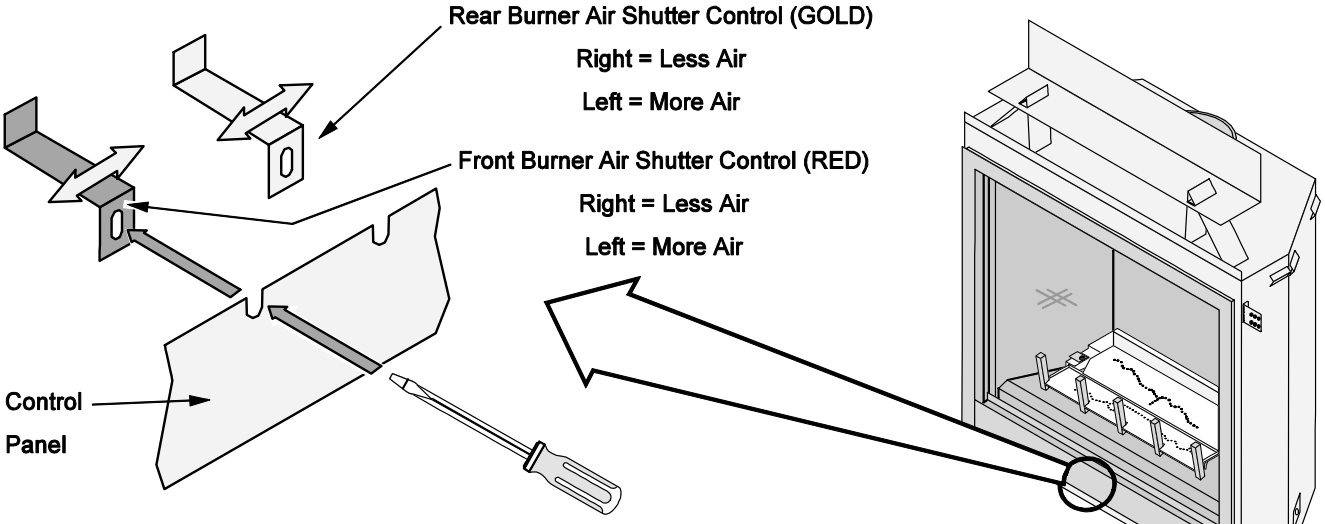

NOTE: Use a screwdriver to adjust the air shutter (it will be hot). Slide it through the control panel and into the air shutter control.

Typically, the air shutter is more closed (right) on NG, more open (left) on LP.

7. Adjust the flame to its highest position - the flames should not contact the top of the firebox. Check the flame on low position. The flames should burn off of each burner hole. If the heater does not work correctly, contact your Travis dealer for a remedy.
8. Give this manual to the home owner for future reference and fully explain operation of this heater. For comprehensive operating and maintenance instructions, refer to the Owner's Manual.

ACID WASH WARNING: Make sure any masonry that has been treated with acid wash has been properly neutralized (this is used primarily with brick faces). Acid wash (muriatic acid) is used to remove excess mortar.

Location of Controls

There is a door on the lower portion of the screen assembly to provide access to the manual controls on the fireplace. The door is held closed by two magnets. Open the door by gently pulling outward on the upper portion of the lower trim.

GSB2 Version

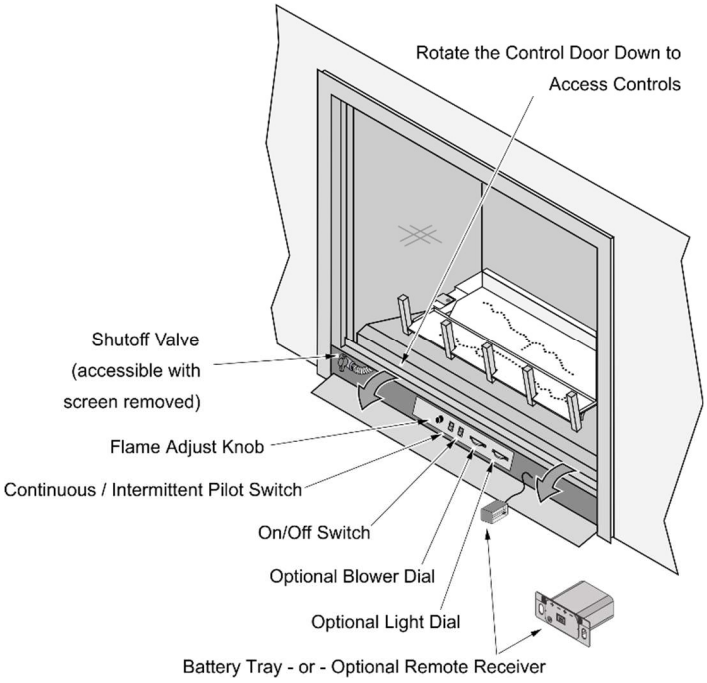

GSR2 Version

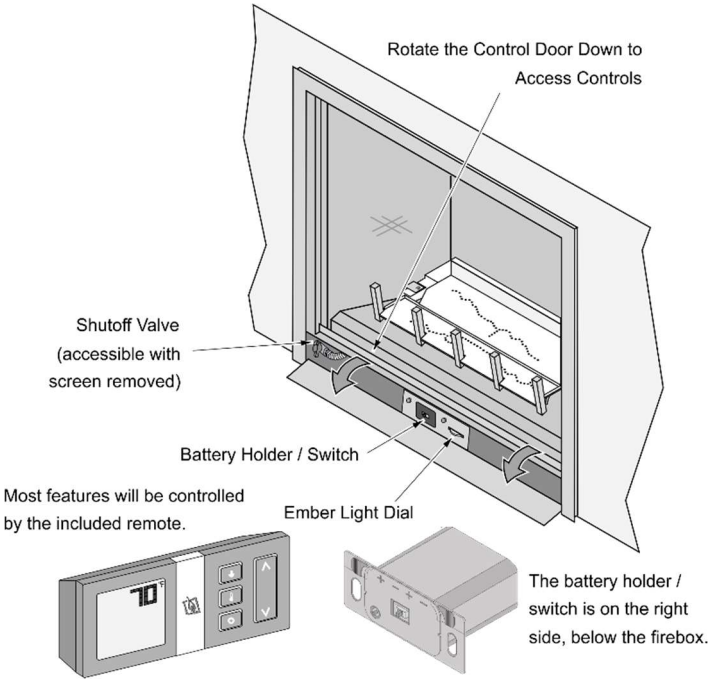

MV Version

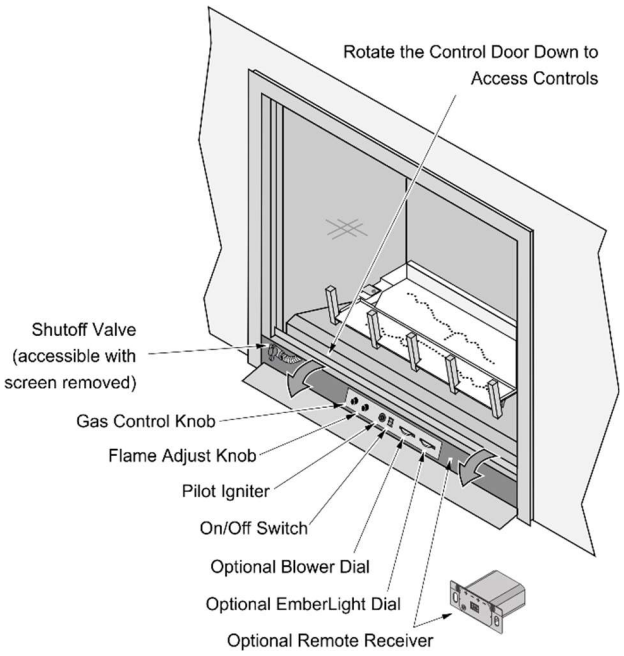

MV Units Only - Starting the Pilot

<u>Remove the glass frame before starting the pilot.</u>

The pilot flame is required to ignite the main burners (it also plays a safety role). It should be left on once lit. It will stay lit unless the gas control valve is turned to "OFF" or if the burner has not been lit in a 7 day period (see “Pilot Fuel Conservation Timer” section on pg. 46). However, the pilot will go out if the gas is shut off, the propane tank runs out (or low) or if the stove malfunctions. If the pilot turns off frequently, call your dealer for information.

<u>NOTE</u>: Suggestions on how to limit the need to restart the pilot during the heating season can be found on page 46.

To start the pilot follow the directions below:

<u>WARNING</u>:
When lighting or re-lighting the pilot, the glass must be removed (see page 48).

a Remove the glass (see page 48).

b Push the gas control knob in slightly and turn it to the "OFF" position. The knob will not turn from "ON" to "OFF" unless the knob is depressed slightly. Wait five minutes to let any gas that may have accumulated inside the firebox escape. If you smell leaking gas, follow the directions on the cover "IF YOU SMELL GAS".

c Turn the gas control knob to the "PILOT" position and press the knob in, this will allow gas to flow to the pilot light. Press the button on the pilot igniter repeatedly until you see the pilot light.

<u>WARNING:</u>
If the pilot does not light after 15 seconds, release the knob and call your dealer for service. Do not attempt to light pilot until service has been performed.

d Keep the gas control knob depressed for 30 seconds once it is lit.

e Release the gas control knob. If the pilot goes out, repeat step C. If the pilot refuses to stay lit, call your dealer for service. With the pilot lit, proceed to step “f”.

f Replace the glass.

g Turn the gas control knob counter-clockwise to "ON". The pilot is now lit and the heater can be turned on and off.

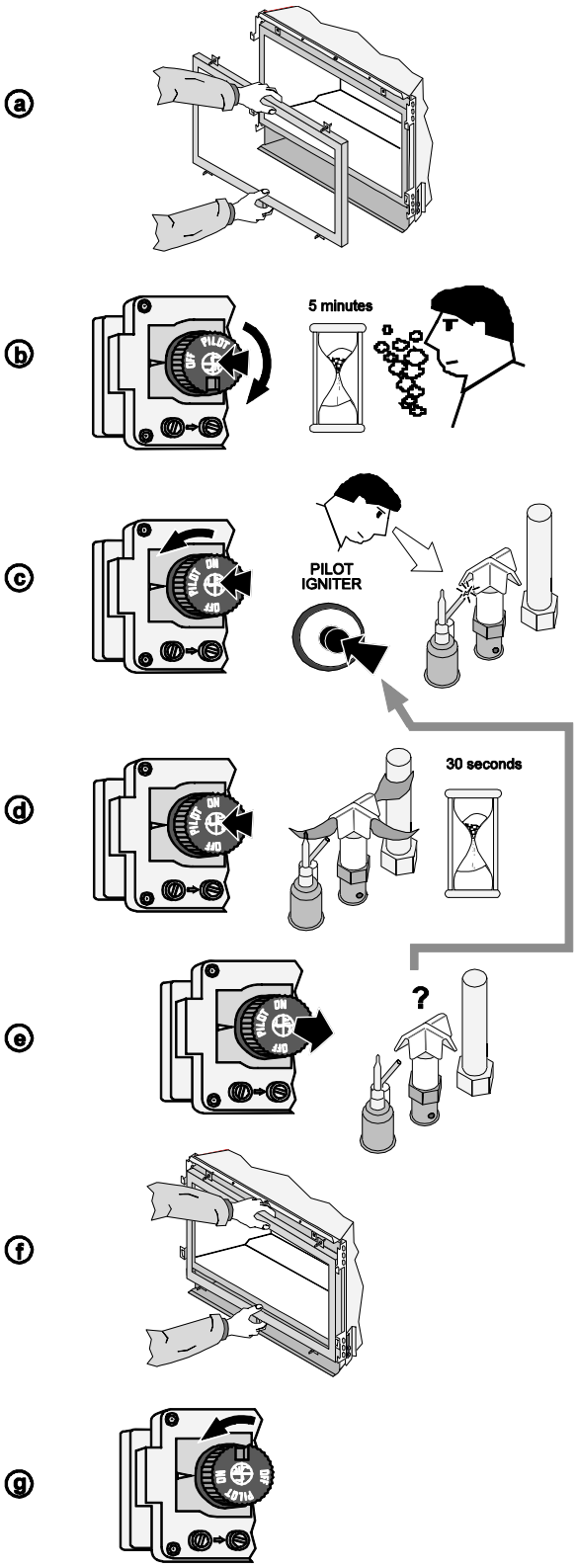

Pilot Fuel Conservation Timer (MV units)

7 Day Pilot Shutoff Timer (MV Units)

This appliance is equipped with a 7 day pilot shutoff timer. This timer helps conserve fuel and save money by turning the pilot off when the appliance is not used for 7 days (this timer is mandated in certain areas for conservation purposes).

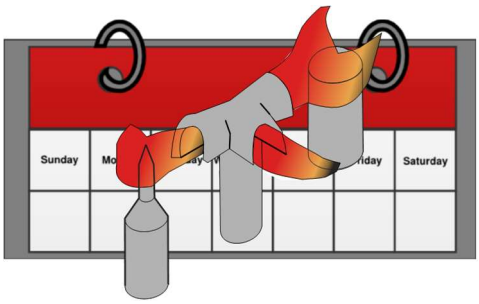

The appliance will function normally as long as the burner is engaged within a 7 day window. Each time the burner is turned on the 7 day timer resets. If the burner is not engaged within the 7 day window, the pilot will automatically turn off to conserve fuel. If the pilot is turned off, it will need to be manually re-lit.

To prevent the need to restart the pilot during the heating season, we have listed a few strategies below:

Option 1: Remember to periodically turn on the heater during the heating season

If you use your heater for supplemental heat, this may be the best solution. Set a specific time, once or twice per week (e.g. 5pm on Tuesday & Friday) to turn the heater on for a few minutes. This will restart the timer and prevent the need to restart the pilot.

Option 2: Install a thermostat

This will keep the room at a constant temperature and will, in most cases, keep the heater working throughout the heating season. Light the pilot at the beginning of the heating season and set the thermostat to the desired room temperature. As long as the outside temperatures does not rise excessively, for seven days or more, the pilot will continue to operate.

Option 3: Use a programmable thermostat

A programmable thermostat may be set to turn on, once per week, to a high temperature for a short time. This will reset the 7-day timer and allow the heater to operate without having to restart the pilot.

Pilot Fuel Conservation Timer (GSB & GSR units)

7 Day Pilot Shutoff Timer (applies to units in CPI mode only)

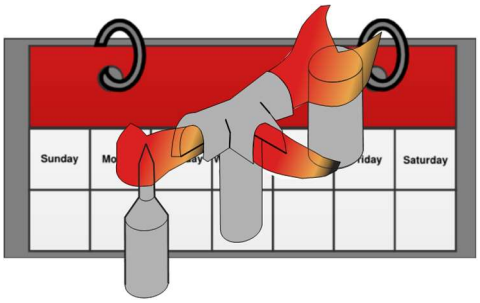

This appliance may be equipped with a 7 day pilot shutoff timer. This timer helps conserve fuel and save money by turning the pilot off when the appliance is not used for 7 days (this timer is mandated in certain areas for conservation purposes). This applies only when the unit is in CPI (Continuous Pilot Ignition) mode. If the unit is in IPI (Intermittent Pilot Ignition) mode, the timer does not apply.

When in CPI mode the pilot will remain lit as long as the burner is engaged within a 7 day window. Each time the burner is turned on the 7 day timer resets. If the burner is not engaged within the 7 day window, the pilot will automatically revert to IPI mode and turn off to conserve fuel.

To switch back to CPI, simply:

GSB2 Units: toggle the IPI/CPI switch to IPI, then back to CPI.

GSR2 Units: use the remote to toggle from IPI mode, then back to CPI mode.

To prevent the need to reset the pilot mode during the heating season, we have listed a few strategies below:

Option 1: Remember to periodically turn on the heater during the heating season

If you use your heater for supplemental heat, this may be the best solution. Set a specific time, once or twice per week (e.g. 5pm on Tuesday & Friday) to turn the heater on for a few minutes. This will reset the timer and prevent the need to restart the pilot.

Option 2: Use a thermostat

GSR Units: Use the thermostat included with the appliance

GSB Units: Consult your dealer for thermostats compatible with your appliance.

The use of a thermostat will keep the room at a constant temperature and will, in most cases, keep the heater working throughout the heating season. Light the pilot at the beginning of the heating season and set the thermostat to the desired room temperature. As long as the outside temperature does not rise excessively, for seven days or more, the pilot will continue to operate.

Option 3: Use a programmable thermostat (GSB2 Only)

A programmable thermostat may be set to turn on, once per week, to a high temperature for a short time. This will reset the 7-day timer and allow the heater to operate without having to restart the pilot.

Glass Frame Removal and Installation

A barrier designed to reduce the risk of burns from the hot viewing glass is provided with this appliance and shall be installed for the protection of children and other at-risk individuals.

If the barrier becomes damaged, the barrier shall be replaced with the manufacturer's barrier for this appliance.

The appliance must be completely cool before removing the glass.

Do not strike or slam the glass.

Warning: Do not operate appliance with the glass front removed, cracked or broken. Replacement of the glass should be done by a licensed or qualified service person.

1. Remove the screen-trim assembly by lifting the assembly up slightly and tilting it toward you. The mounting hooks on the back of the assembly will disengage the fireplace. Set the assembly aside for reinstallation.

NOTE: Opening the access door on the front of the assembly allows for a easy location to get a secure grip on the assembly for removal

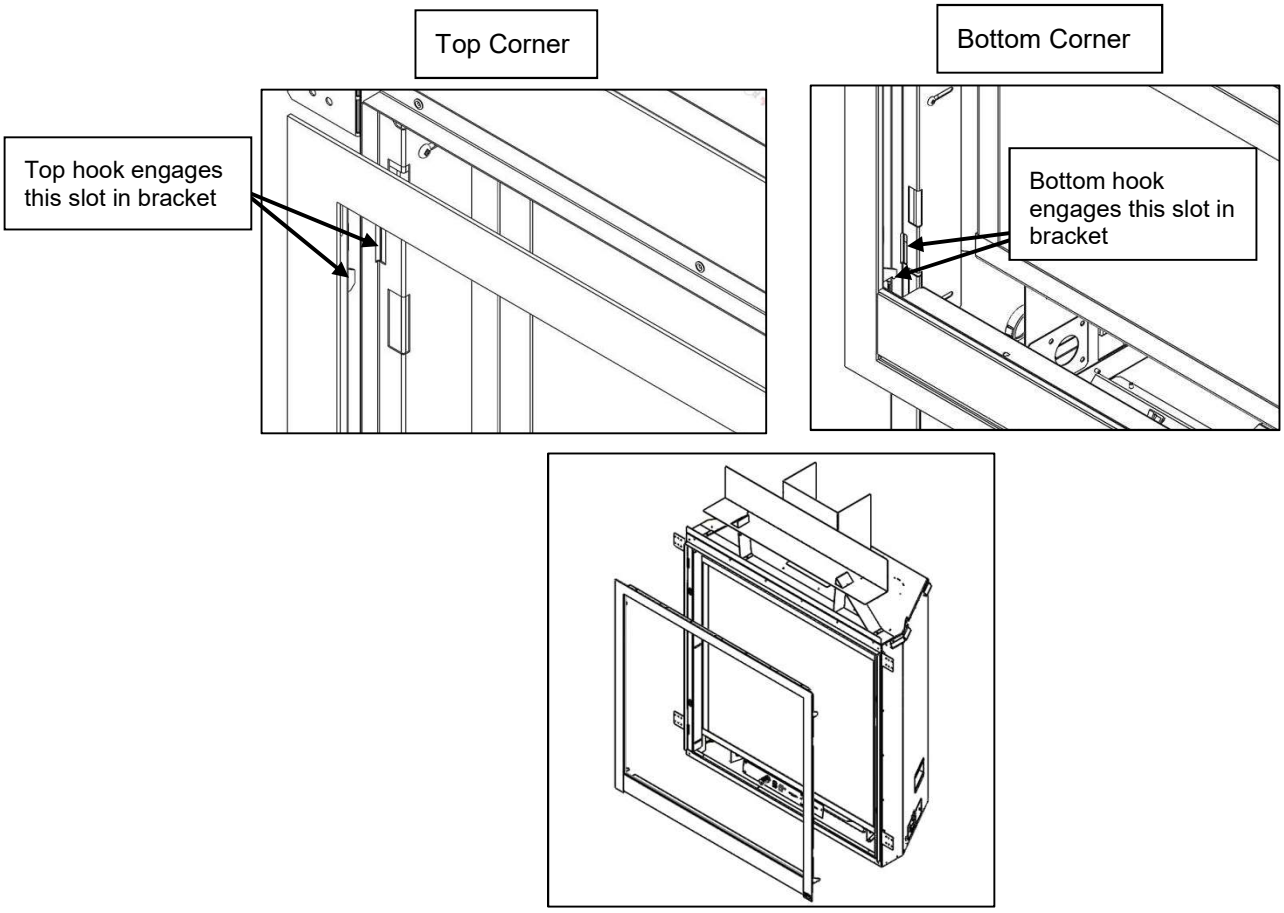

	Replacement Barrier Part #
36 CF ProBuilder	250-04839

2. Remove the glass frame following the directions below.

a Open the latches holding the glass frame in place (start with the bottom) - follow the directions shown to the right.

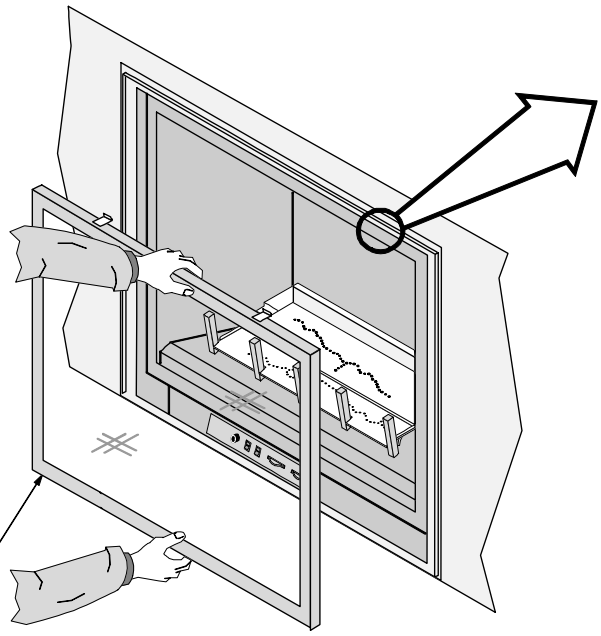

Pliers may be used

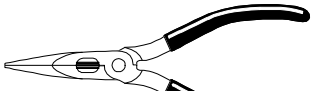

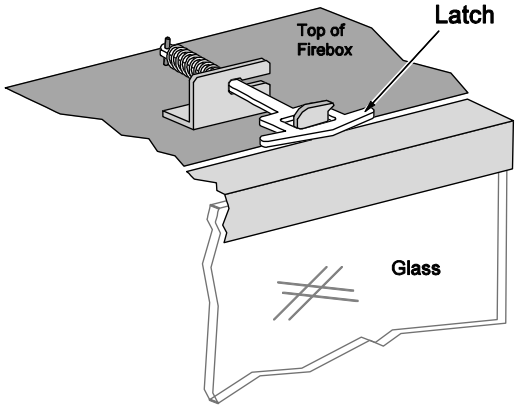

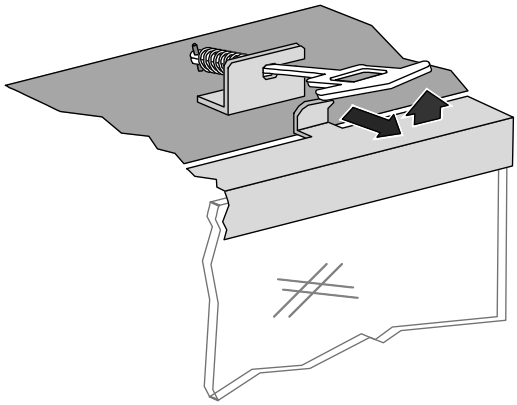

b Lift the glass frame up and pull it forward to remove.

NOTE:
You may need to lift the glass frame while re-attaching.

Re-Attaching the Glass Frame:

a) Hang the glass frame on the firebox.

b) While holding in place, attach the upper latches (follow the instructions to the right in reverse).

c) Lift the glass frame slightly and attach the lower latches.

NOTE: Make sure the glass frame is all the way in place - it should be parallel with the front of the fireplace when installed.

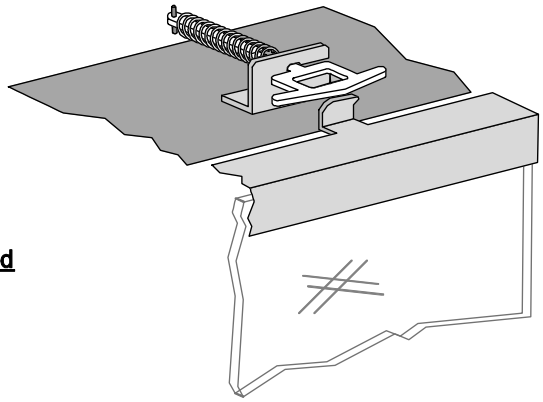

	Replacement Glass Frame Part #
36 CF ProBuilder	250-04837

The latch can come loose from glass frame anchor. This occurs when it is turned 1/4 turn when it is disengaged. Follow the directions below to re-install the latch if it becomes loose.

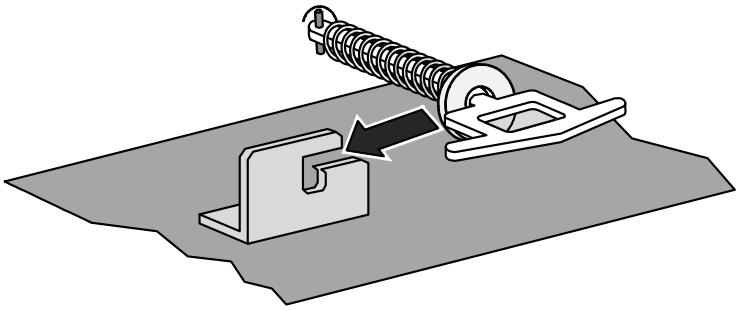

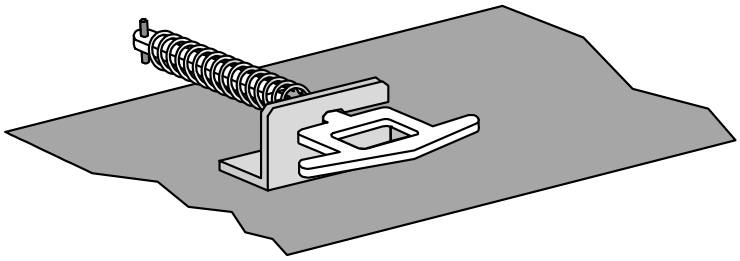

Barrier Screen Visual Deflector Adjustment

The barrier screen assembly has an adjustable visual deflector along the lower edge. If the assembly is adjusted to accommodate thick facing material, adjust the deflector, as shown below, to block the view of the valve area.

1. Place the screen assembly face down on a soft surface to protect it from scratching. Locate the nuts along the bottom edge of the deflector (in this example there are 3, your fireplace may have more).

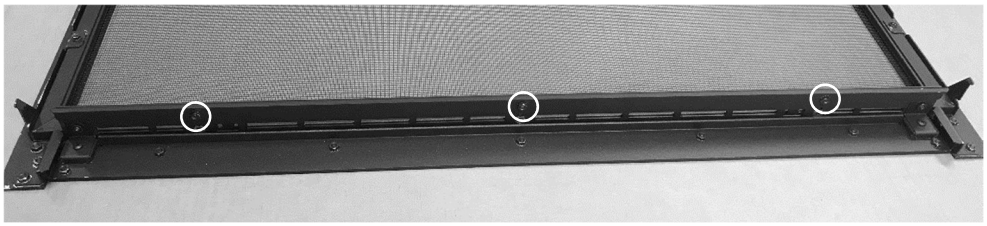

2. Remove the nuts using an 11/32” nut driver. Move the deflector to the desired position and reinstall the kept nuts. Test fit the assembly to the fireplace and make any adjustments as needed.

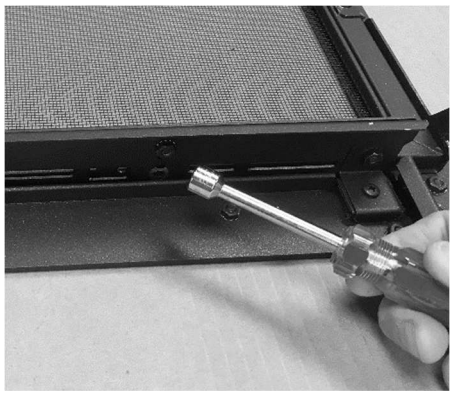

Shipping Retaining Nut Removal

(2) 3/8” nuts secure the rear burner to the fireplace for shipping purposes. Remove and discard the nuts (see below).

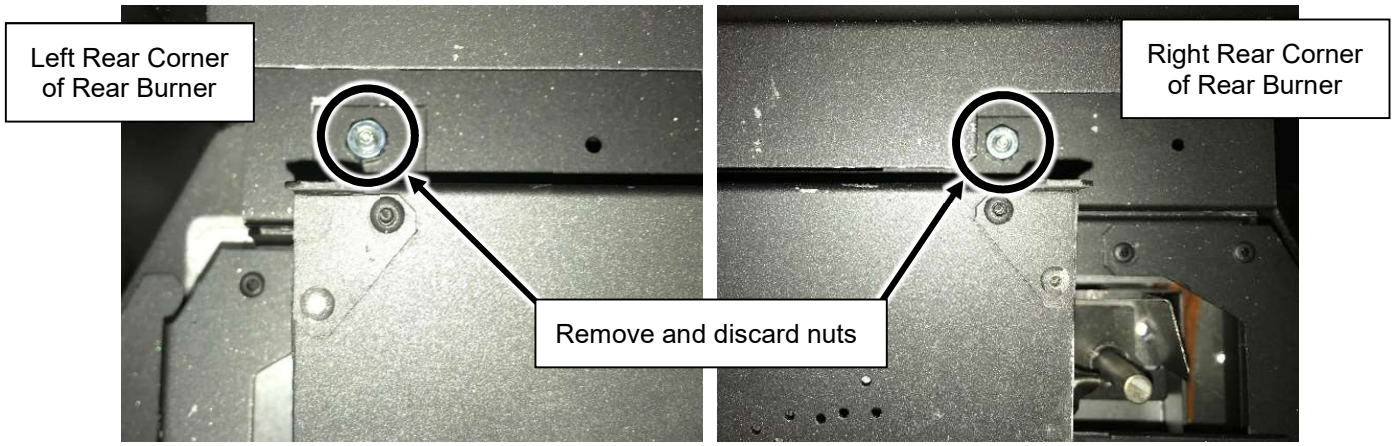

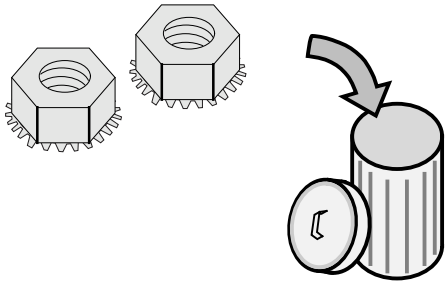

<u>NOTE</u>: Do not reinstall the shipping nuts. The burner brackets sit over the threaded pins and the burner needs to be able to move freely as it expands and contracts with heat.

Log Set Installation

Installation Warnings

NOTE: Consult the installation manual for order of installation. If using propane (LP), convert the appliance before installing the log set. If using firebacks, install them prior to installing the log set.

- **The logs are fragile, especially after being exposed to heat.**
- Make sure the gas control valve is OFF and the heater is cool prior to installing logs.
- Failure to position the parts in accordance with these diagrams or failure to use only parts specifically approved with this appliance may result in property damage or personal injury.
- The burner must be correctly positioned before installing the log set. Make sure the burner is fully seated and the pilot is properly aligned. See owner's manual for details on burner removal.

Log Set Overview – GSR2 Model

The GSR2 version requires a log set (Oak = 94500626, Birch = 94500624). Instructions for installing these logs are included with the logs.

Log Set Overview – MV/GSB2 Models

When installed, the (8) logs should appear as shown below. See the following pages for installation.

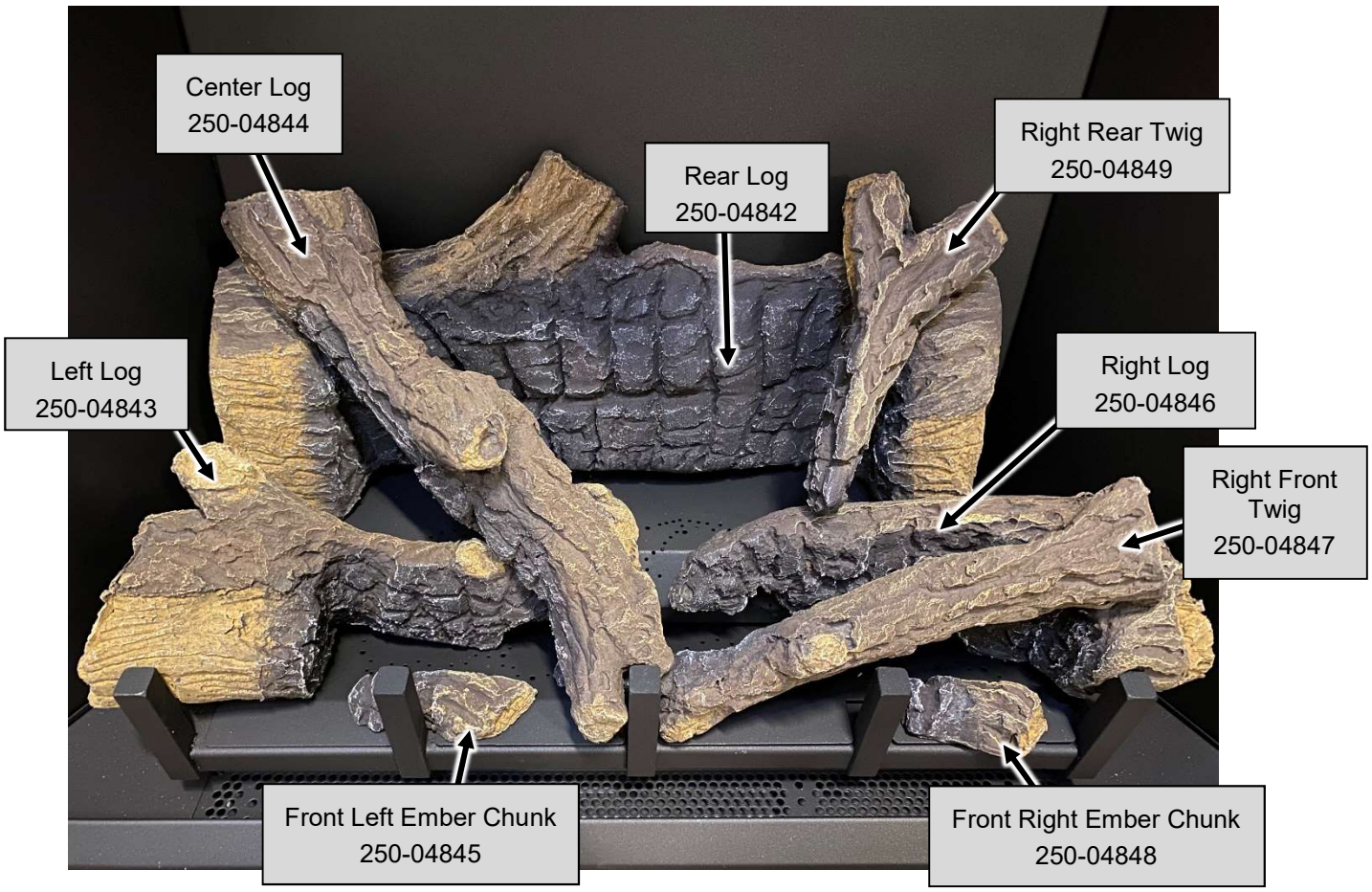

Rear Log

The back log has two pockets that insert over two tabs on the back burner (see photos below). Place the log in place and push it back. The log straddles the burner and does not cover any burner holes. Make sure the corner of the log is lined up with the rivet on the burner as shown in the lower right picture.

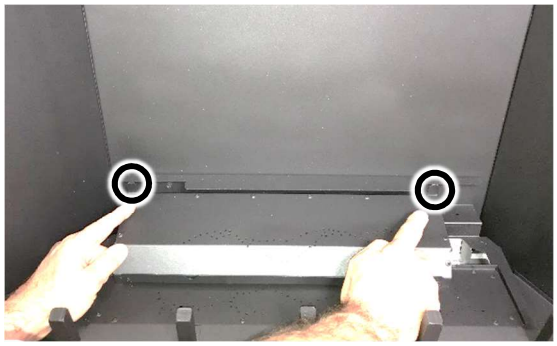
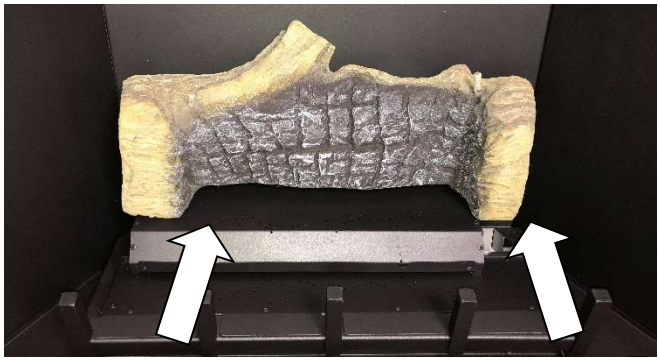

Left Log

The left log has a channel (A) on the bottom that fits over a ridge on the burner and a notch (B) that contacts the grate. Set the log in place and slide it to the rear.

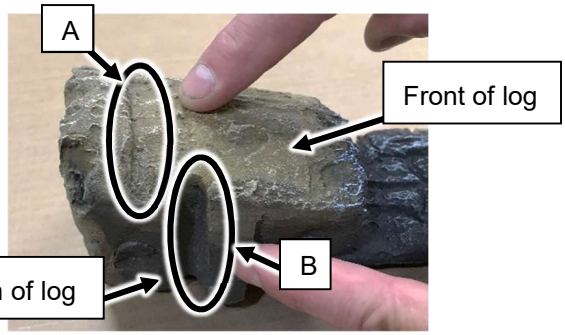

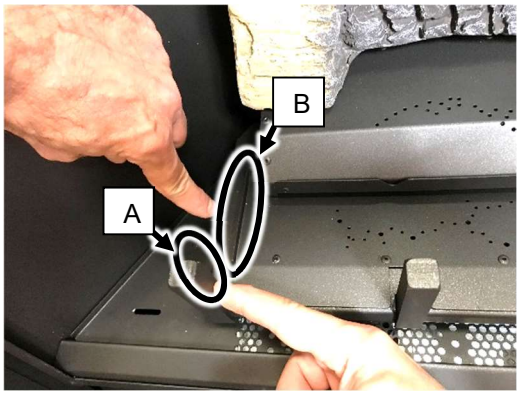

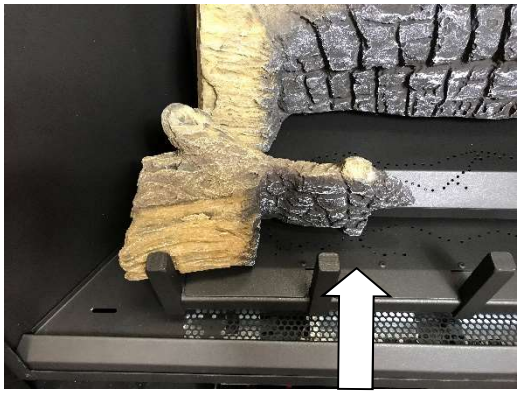

Right Log

The right log has a channel (C) on the bottom that fits over a ridge on the burner and a notch (D) that contacts the grate.

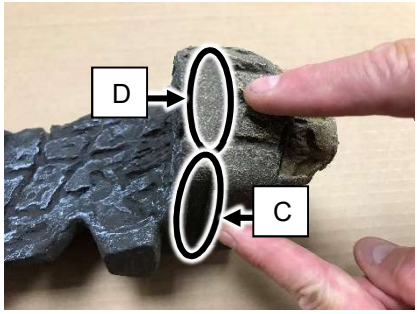

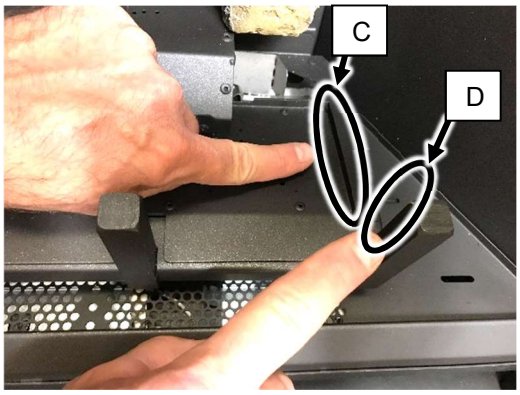

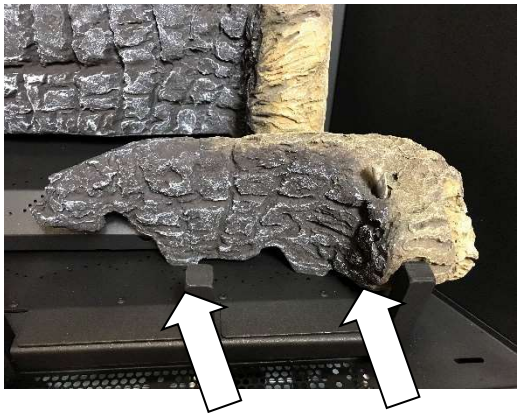

Right Front Twig

The right front twig has a hole for a locating pin on the bottom and a notch to rest on the grate at one end. Place twig over the pin and adjust so the notch is in contact with the grate as shown below.

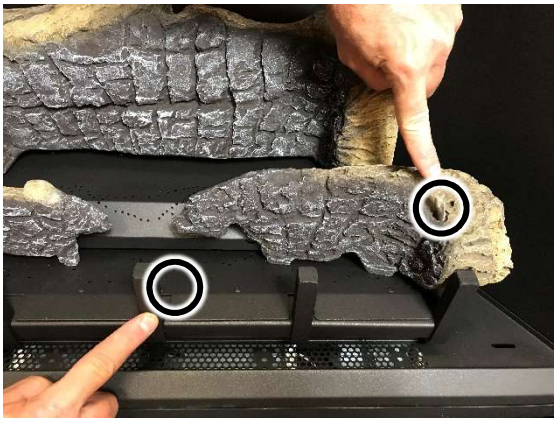

Right Rear Twig

The right rear twig is shown below. It has a hole for a locating pin on the bottom. When in place, the front tip just barely rests on the right log as shown below.

Center Log

The center log has a hole for a locating pin on the bottom and a notch to rest on the grate at one end.

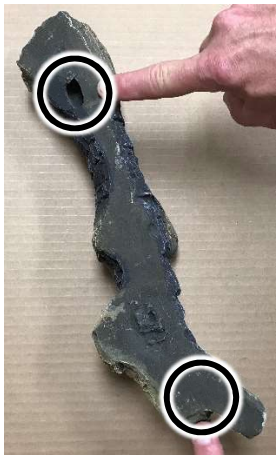

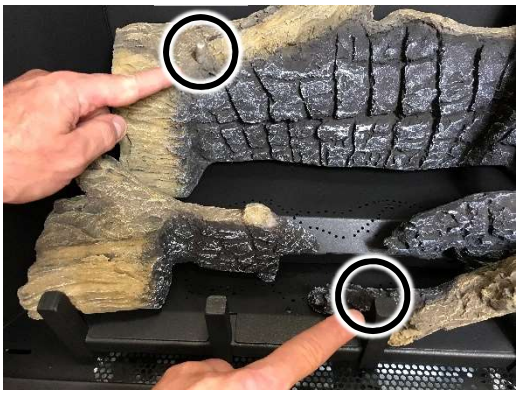

Ember Chunk Identification

There are (2) ember chunks, that look very similar, included with this log set. It is important that they are on the correct side of the burner or they may cause flame impingement. Below is a picture that shows the ember chunks side by side to aid with identification.

Left Ember Chunk

The left ember chunk and has a flat bottom and charred end. The chunk fits behind the bar, 2nd from the left, of the log grate. The charred end should be to the left. Place the ember chunk as shown below. Make sure the chunk is positioned so it does not cover any burner holes.

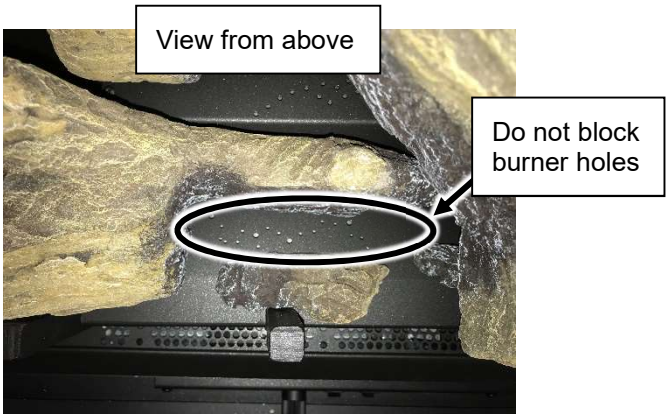

Right Ember Chunk

The right ember chunk also has a charred end. The chunk fits between the 2 right bars of the log grate (on the angled portion of the burner). The charred end should also be to the left as shown below. Make sure the chunk is positioned so it does not cover any burner holes.

Ember bed Glass and Ember Material Installation (GSR2 ONLY)

Ember bed Glass Installation

The Ember-Glo™ lights come standard on the GSR2 units. There are an optional accessory for GSB2 or MV units. If the upgrade kit is not used in for the GSB2 or MV units, you may skip this section and proceed to Ember Installation.

- Make sure the ember skirt is in place. The skirt hooks over the front of the ember platform and slopes outward toward the glass. The skirt helps keep the glass and ember material from falling off the platform when the glass is removed.
- Locate the perforations in front of the log grate.

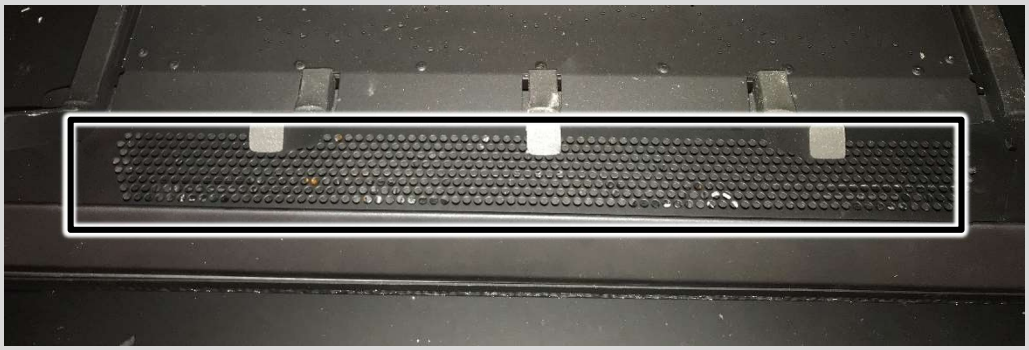

- Place a thick layer of the ember glass over the perforations making sure to cover all of the holes completely.

- Lightly dress the ember glass with the black touch-up paint provided. Check the appearance with the lights on and add additional paint, as needed, for a realistic glowing ember appearance.

NOTE: If power is supplied to the fireplace it can helpful to turn the lights on while painting so you can determine an appropriate amount of paint for a realistic ember appearance.

NOTE: We recommend that you use a piece of paper, cardboard as a shield to mask the log grate and burner from overspray (see below).

Ember Material Installation (GSR2 ONLY)

- Once the ember glass installation is complete, place a generous amount of ember material on the firebox floor on either side of the firebox. Completely cover any visible metal on the firebox floor.

NOTE: Make sure no ember material is placed directly on the burner.

HINT: Add a few randomly placed ember chunks over the ember bed glass to produce a more realistic appearance.

Ember Installation (GSB2 or MV)

A bag of embers is provided to further enhance the firebox. Place the embers on the firebox floor and on the burner. Do not place embers over any of the burner holes or air channels.

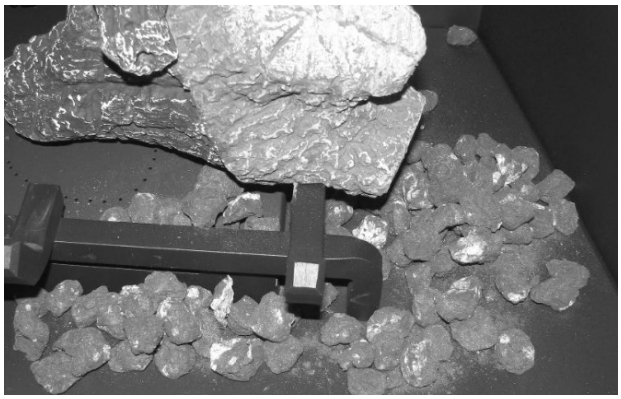

Rock Wool Placement (All Models)

The included rock wool is placed on top of the burner to enhance the glow from the burner. **The rock wool works best when it is applied in a very thin layer.** The best method for applying the rock wool is to brush it on to the burner. Compress a clump of rockwool between your thumb and forefinger. Use a stiff brush to apply a thin layer of rockwool fibers onto the burner. Do not use the entire bag of rockwool. Use only a small amount and save the remainder. Over-use of rockwool will diminish the glow and may cause sooting or other adverse conditions.

LP Conversion Instructions

WARNING

This conversion kit shall be installed by a qualified service agency in accordance with the manufacturer's instructions and all applicable codes and requirements of the authority having jurisdiction. If the information in these instructions is not followed exactly, a fire, explosion or production of carbon monoxide may result causing property damage, personal injury or loss of life. The qualified service agency is responsible for the proper installation of this kit. The installation is not proper and complete until the operation of the converted appliance is checked as spaecified in the manufacturer's instructions supplied with the kit.

Caution: **The gas supply shall be shut off prior to disconnecting the electrical power, before proceeding with the conversion.**

Note: **Convert the appliance prior to installing the gas line to ensure proper gas use.**

The GSR Stepper Motor Kit (4-pack = 94400999, single = 250-01463) is required for converting this appliance to LP. The kit contains the stepper motor (regulator) and torx wrench. The burner orifices, pilot orifice, and burner gaskets are shipped with the appliance.

1 Remove the barrier and glass. Remove the logs and embers (if installed - page 51)

2 Remove the burners following the directions below.

Lift the rear burner and lift it from the firebox. The burner has a bracket that inserts over two pins behind the burner. When replacing the burner make sure it is properly located.

Lift the front burner, slide it to the right, and lift it from the firebox. When replacing the burner make sure it is properly located.

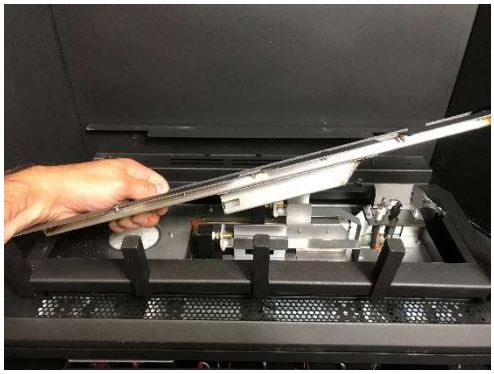

Remove the manifold covers.
NOTE: Discard the orifice gaskets and reinstall the manifold covers after changing the orifices

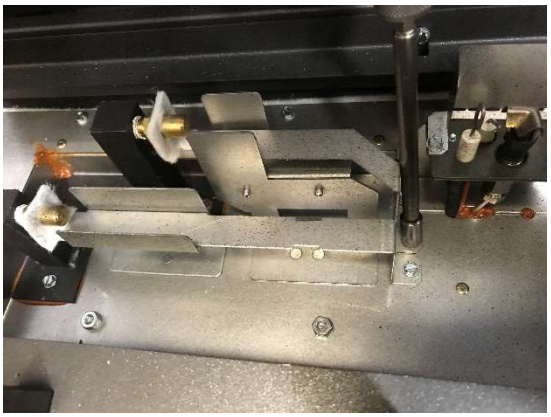

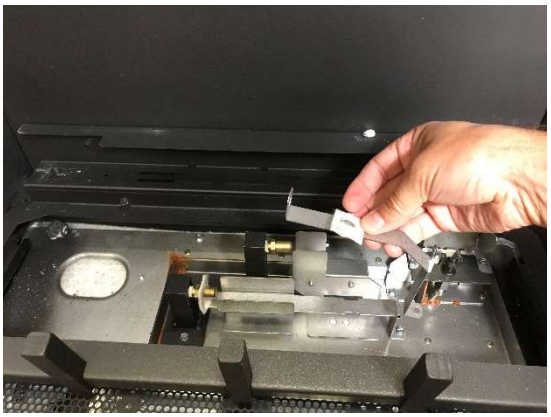

3 Follow the directions below to replace the orifice.

ⓐ Slide the air shutters to provide access to the orifices.

ⓑ Remove and discard the gaskets on each burner orifice.

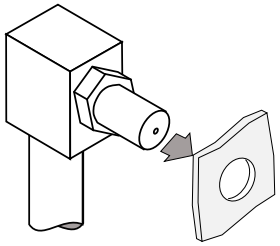

ⓒ Use a adjustable wrench to support the manifold while removing each orifice with a 1/2" wrench.

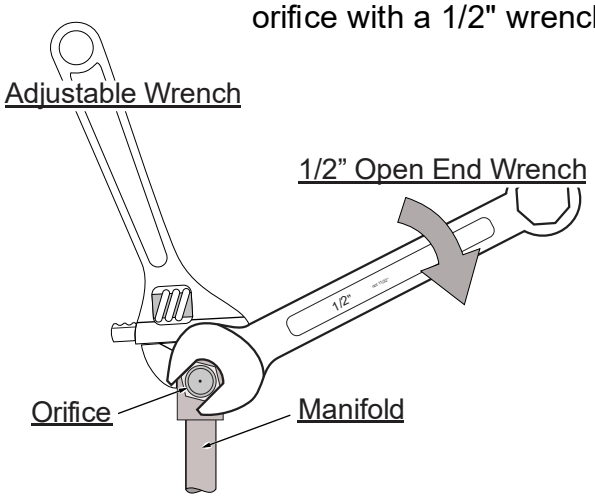

ⓓ Apply thread sealant to the LP orifices prior to installation. Use the chart below to identify the correct orifices.

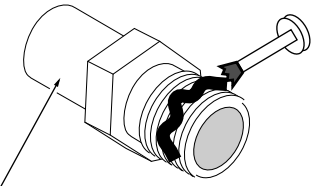

Look here for the orifice identification

ⓔ Screw each LP orifice until orifice protrudes 15/16" (23.8mm) indicating full insertion (use wrench to support manifold when re-attaching orifice).

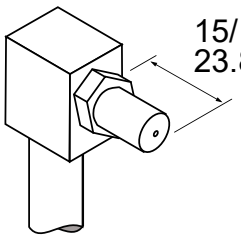

36CF Orifice Numbers

	NG	LP
Front	#54	#63
Rear	#48	#57

4 Install the LP pilot orifice following the instructions below.

(a) Use a 7/16” open-end wrench to remove the pilot hood.

(b) Remove and discard the Natural Gas (NG) orifice. Place the LP orifice in the pilot assembly then replace the pilot hood, tightening the pilot hood until it is snug (do not over-tighten).

5. Discard the orifice gaskets and reinstall the manifold covers after changing the orifices

MV Version

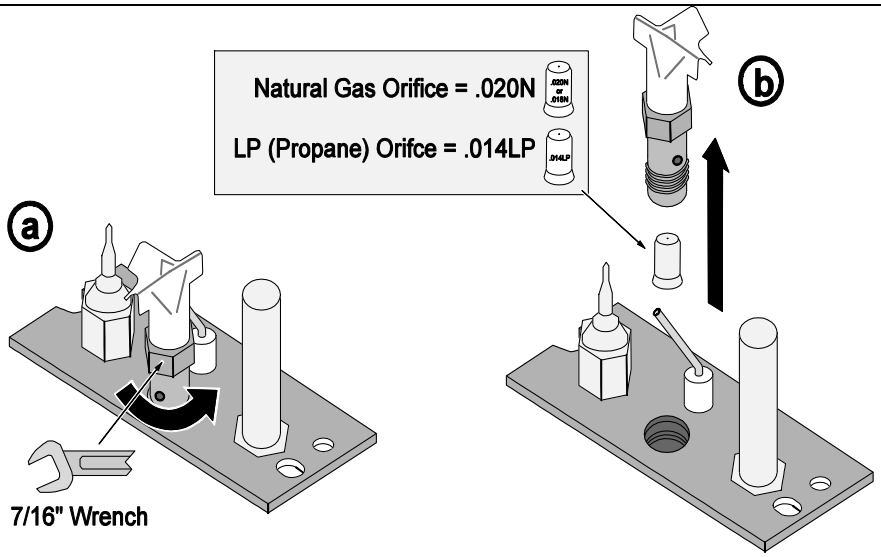

GSB2/GSR2 Version

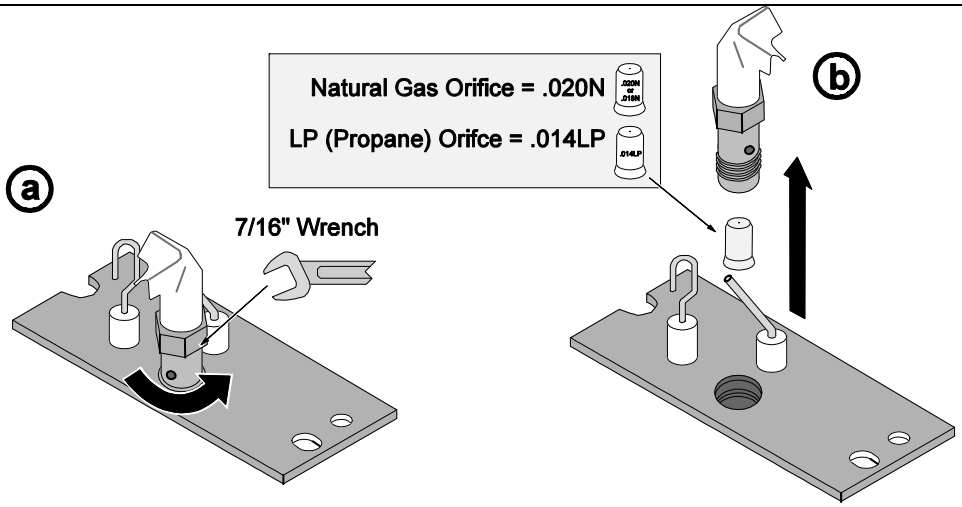

6 Remove the regulator from the front of the gas control valve. There is an knob extension on the regulator knob that will need to be moved to the new regulator. To remove the extension pull toward you. Replace with the propane regulator, using the new gasket and screws included with the regulator. Re-install the knob extension onto the LP regulator knob. The knob extension is directional so you may need to turn it until it lines up properly with the regulator knob and can be pushed into place..

NOTE: Leak test this area after the heater is installed, gas is connected, and the main burner is lit.

MV Version

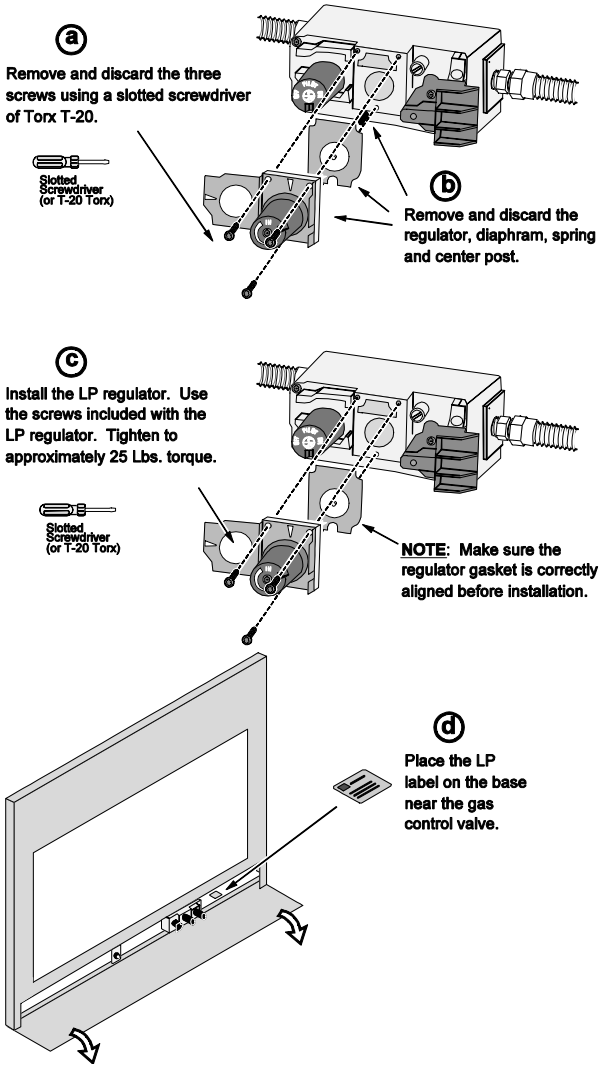

GSB2 Version

Replace the regulator following the instructions included with the regulator kit. Remove and discard the screws (see "a" below) holding the stock regulator in place (see "b" below). Remove the stock regulator and gasket (see "c" below). Place the LP regulator in place, making sure the pre-fitted gasket (see"c" below) is in place – **make sure it is correctly oriented**. Secure using the screws included with the motor – tighten to 25 Lb-inches. **Leak test this area after installation to verify proper installation.** There is a label on the base of the regulator knob indicating regulator type (NG or LP). Place the included label on the valve body where it can be easily seen to insure proper identification ("d").

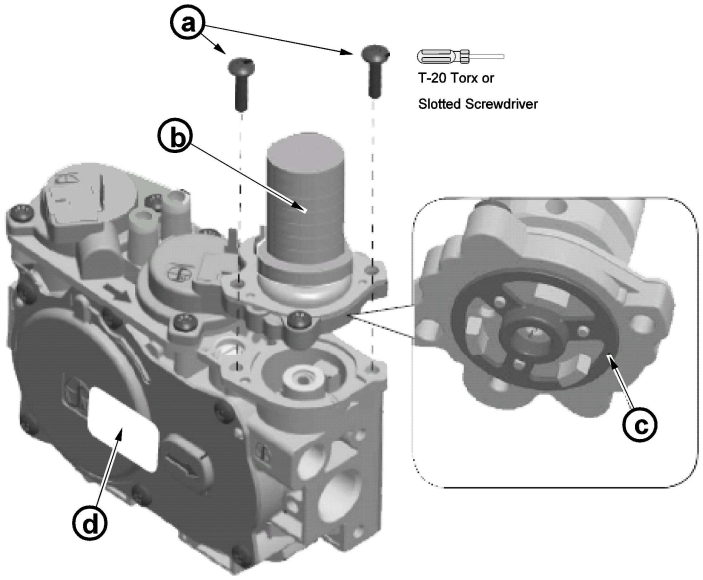

GSR2 Version

The stepper motor (adjustable regulator) has an installation sheet included with it – make sure to follow all of the directions. Place the stepper motor on the gas control valve (see below) – **MAKE SURE IT IS CORRECTLY ORIENTED**. Secure using the screws included with the motor – tighten to 25 Lb-inches. Leak test this area after installation to verify proper installation.

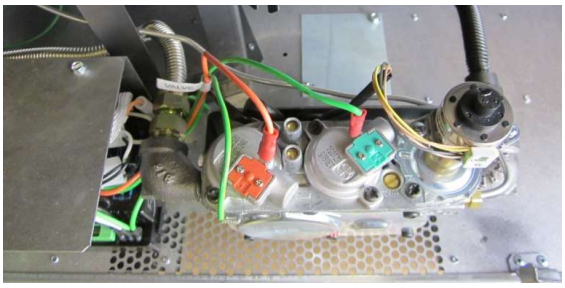

7 Make the gas line connection, bleed the gas line (if applicable), start the heater and thoroughly leak-test all gas connections and the gas control valve.

Wall Mount Remote Thermostat installation (GSB2 and MV Units Only)

Packing List

- GS Wall Remote
- Receiver Assembly
- Switch Blank
- (4) AA Batteries
- (3) AAA Batteries

Installation

<u>If Using the Optional Blower, Install it First</u>

The optional blower should be installed before installing the remote.

1 Remove the lower front access panel from the fireplace by reaching in behind it and loosening the two wing nuts and (1) ¼" screw on each side of the panel that hold it in place (see fireplace manual for details.) Lift up and then out on the panel to remove. Lay the panel face down in front of the fireplace.

2 Remove the 4 screws that secure the dashboard to the fireplace and gently lower it to gain access to the back side.

<u>NOTE</u> There should be enough slack in the attached wires to lower the dashboard to the floor. Make sure not to damage any off the attached wires.

3 Remove the two wires from the back of the on/off switch.

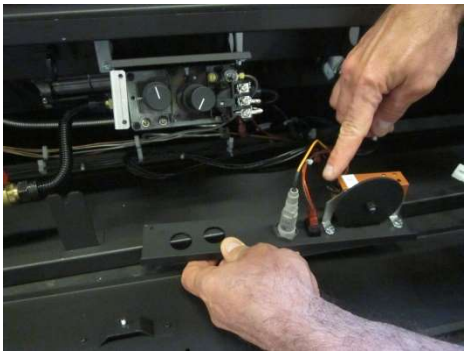

4 Remove the switch from the dashboard by depressing the tabs on the top and the bottom of the switch housing while pressing the back of the switch forward through the hole in the dashboard. Replace the switch with the included switch blank (see pictures below).

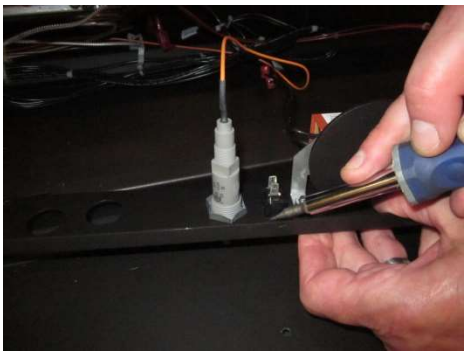

5 Remove the battery holder. Disconnect the red and black wire at the Molex connector.

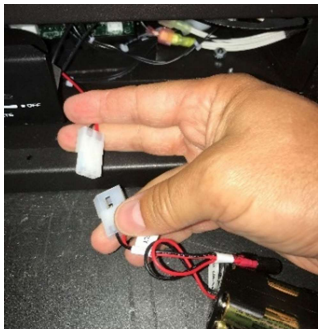

6 Replace the battery holder with the battery box included with this remote kit. Connect the red and black wires to the wires you just disconnected in step 5.

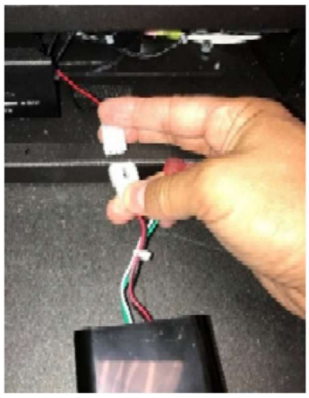

7 Place the battery box on the floor of the fireplace.

8 Replace the dashboard.
9 **Verify wires are not touching the bottom of the firebox. Adjust if necessary.**
10 Install 4AA batteries into the receiver.
11 Install 3AAA batteries into the remote.
12 Sync the remote with the receiver (see syncing instructions included with remote).
13 Return the appliance to the correct configuration.

Wiring Diagram – MV Version

Caution: Label all wires prior to disconnection when servicing controls. Wiring errors can cause improper and dangerous operation.

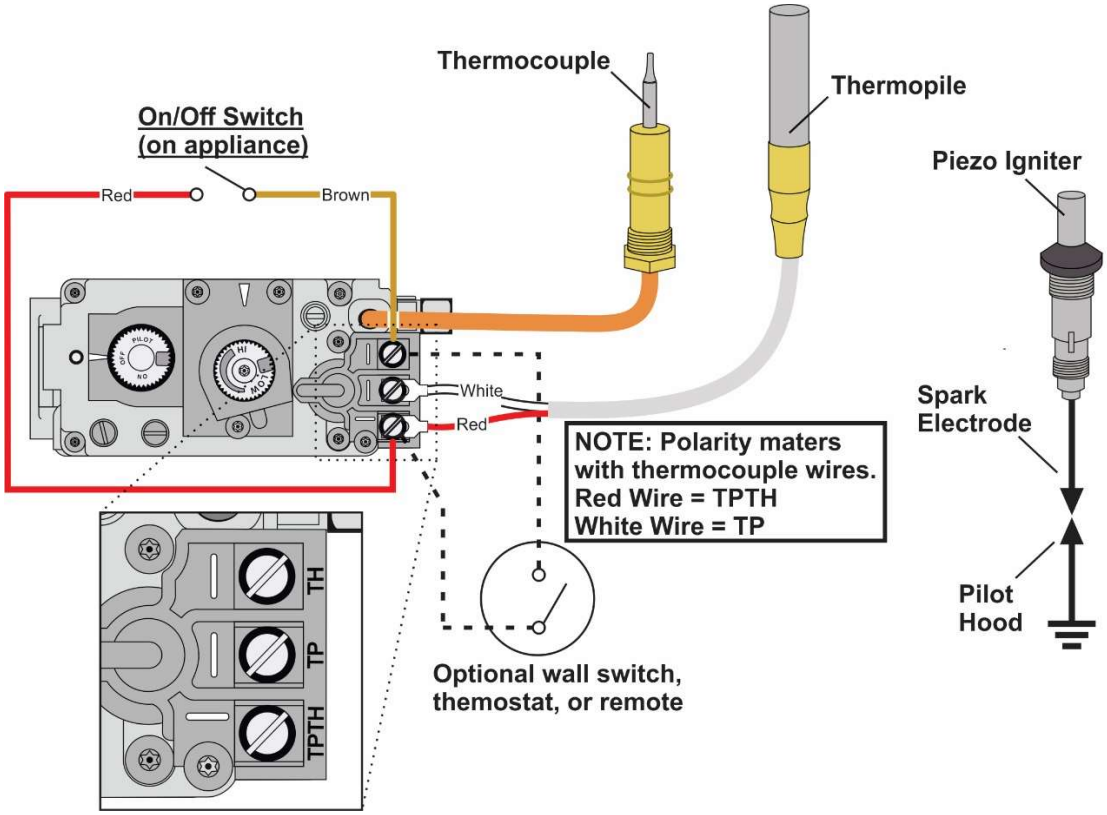

Optional Blower Wiring

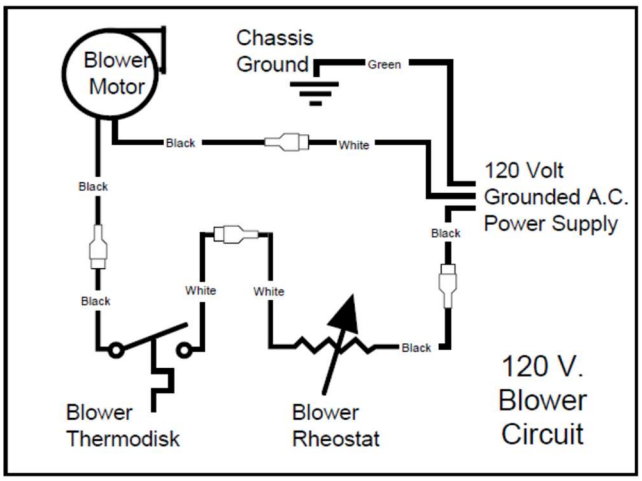

Wiring Diagram – GSB2 Version

Caution: Label all wires prior to disconnection when servicing controls. Wiring errors can cause improper and dangerous operation.

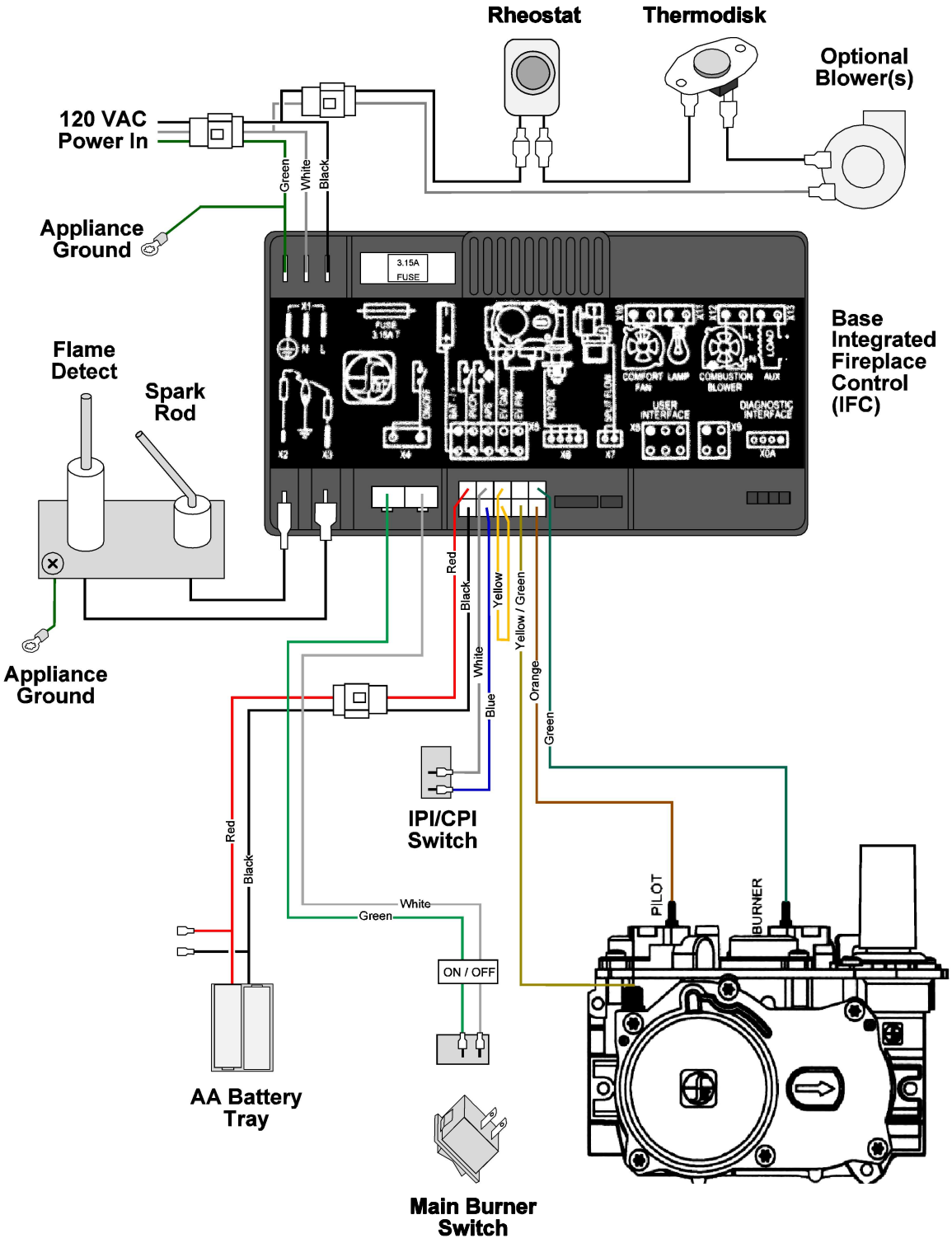

Wiring Diagram – GSR2 Version

Caution: Label all wires prior to disconnection when servicing controls. Wiring errors can cause improper and dangerous operation.

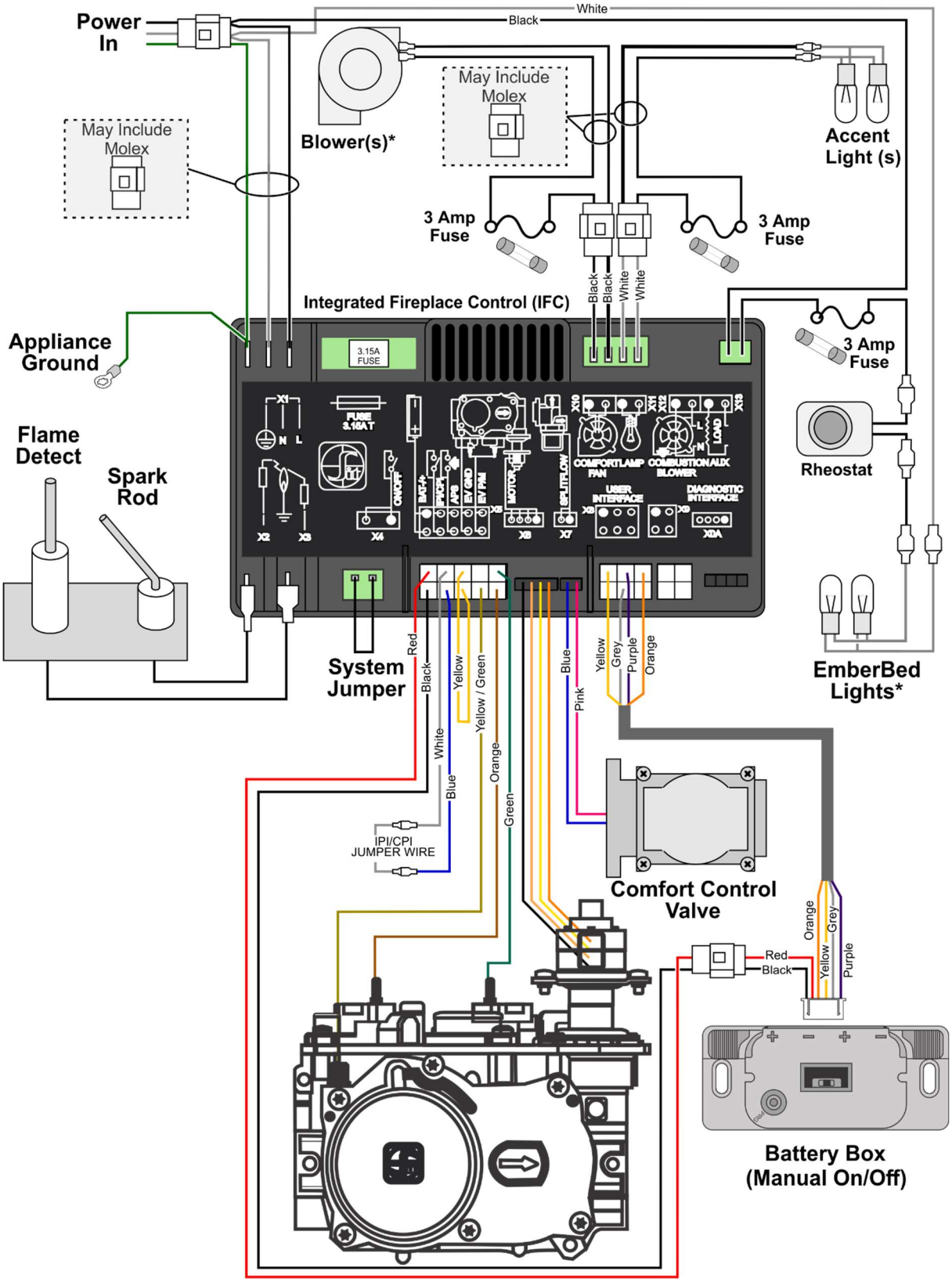

CoolSmart TV - Installation Overview (Optional)

The CoolSmart system is designed to redirect the convective heat of the fireplaces from the front of the unit, just above the glass, to a location higher on the wall. The use of this kit allows for reduced clearances to televisions and a recessed cavity above the fireplace. When using this kit, disregard the standard framing dimensions and follow the framing instructions for the CoolSmart kit.

When used on the PB 36 CF, this kit allows for the **non-combustible facing height to be reduced**. See illustration below for details.

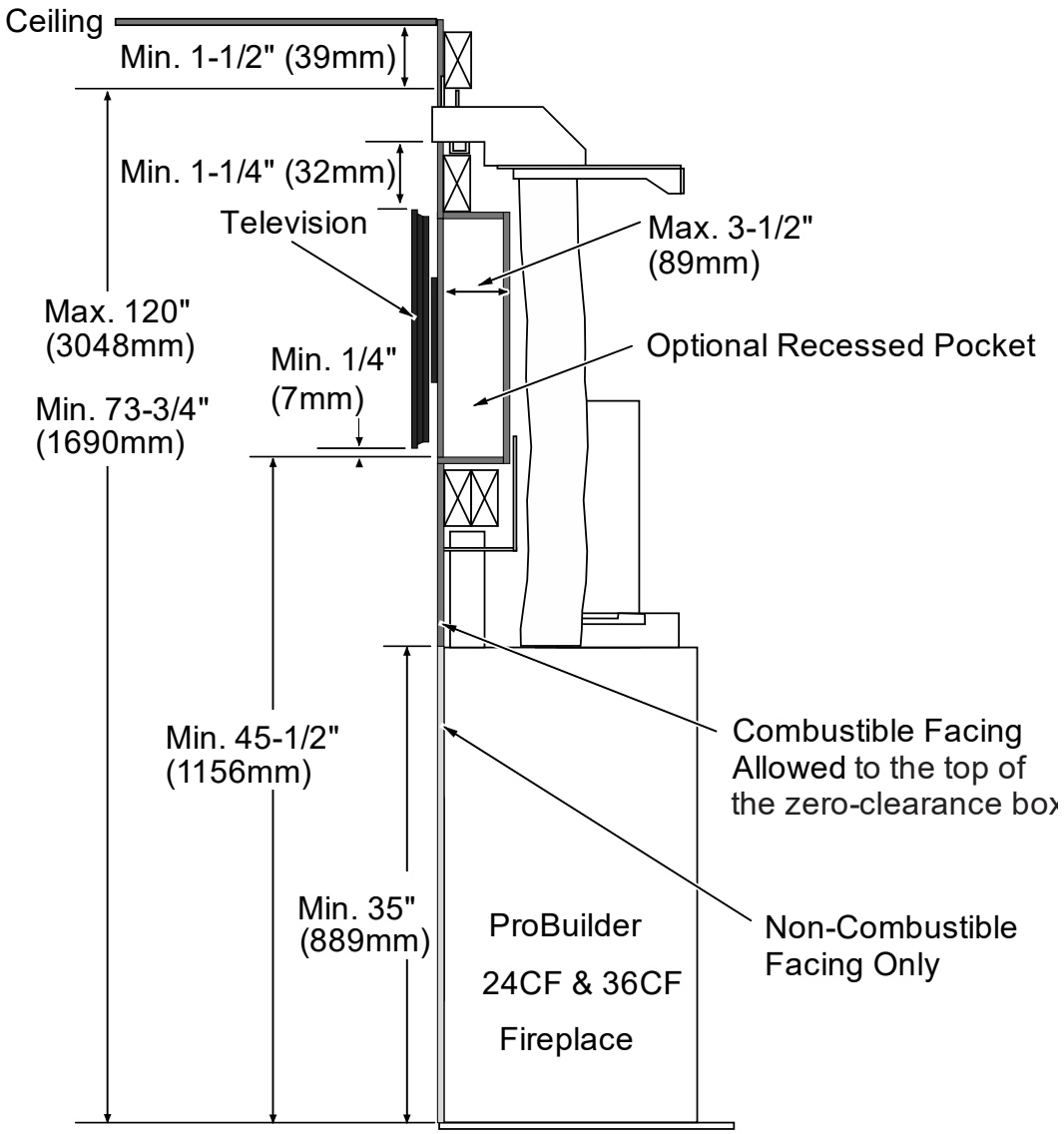

CoolSmart TV - Installation Requirements

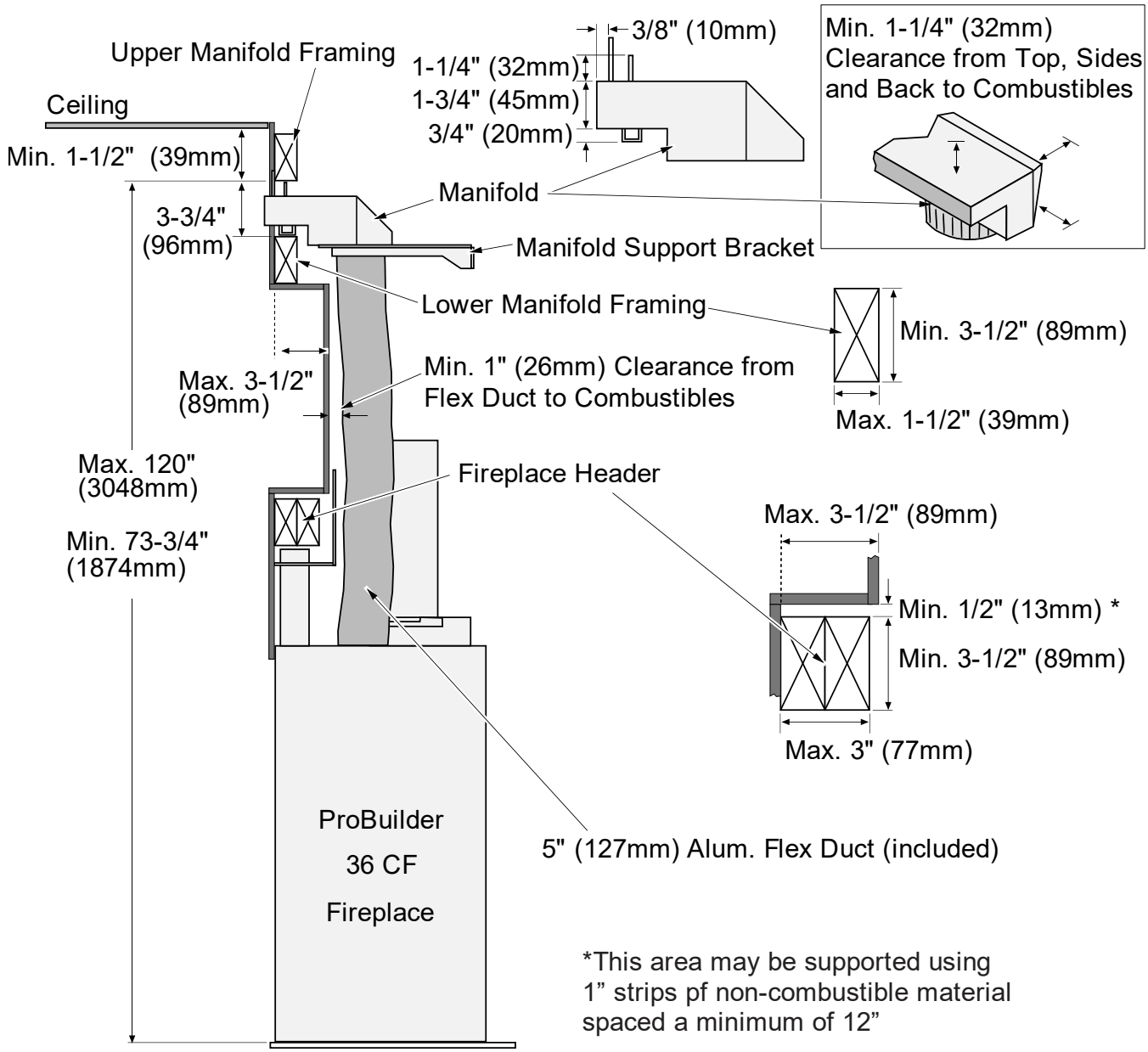

CoolSmart TV - Framing the Chase

When using this kit, disregard the framing dimensions in the manual and follow the framing instructions shown below.

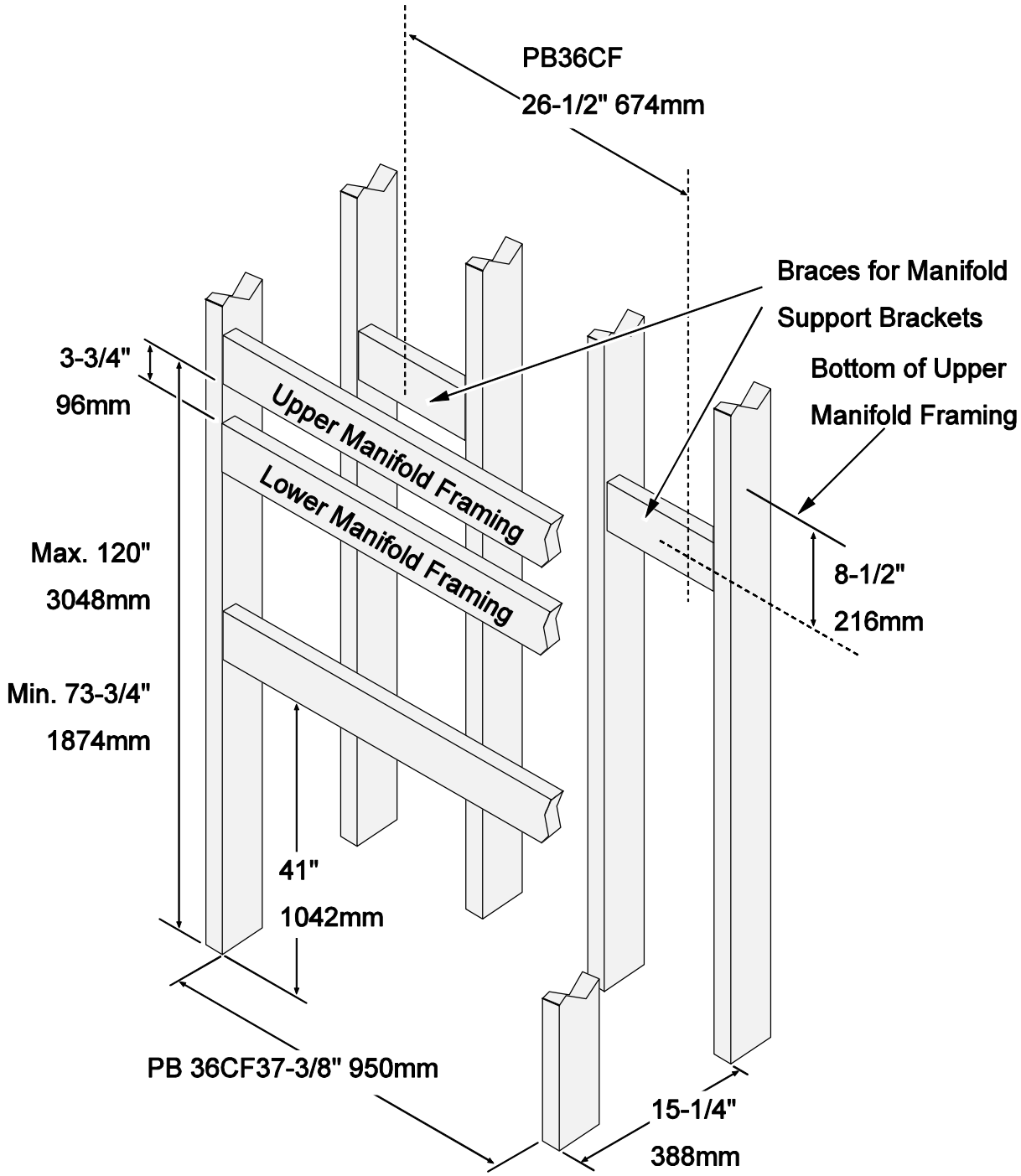

CoolSmart TV - Fireplace Preparation

1 Remove the knockouts from the top of the fireplace.

2 Use snips or diagonal cutters to snip the tab on the knockouts. Press on the far side away from the tap to pop the edge of the knockout up.

3 Grab on to the knockout with pliers and bend it back and forth until the remaining tabs break free. Discard the knock out plate.

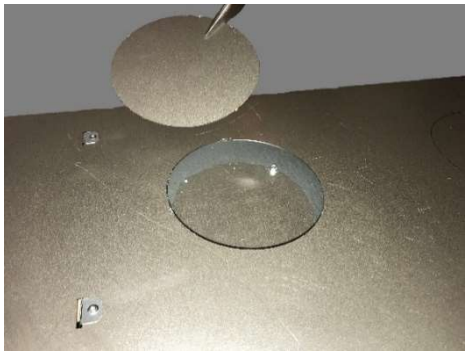

4 Under each knock out plate, you will find a cover plate held in place with (2) ¼" screws. Use a nut driver or drill with an extension to remove the (2) screws. Reach in and remove the cover plate. You may discard the plates.

5 Install the Convection Air Deflectors. The (2) deflectors must be installed prior to attaching the CoolSmart kit. After removing the cover plates, install the deflectors as shown below.

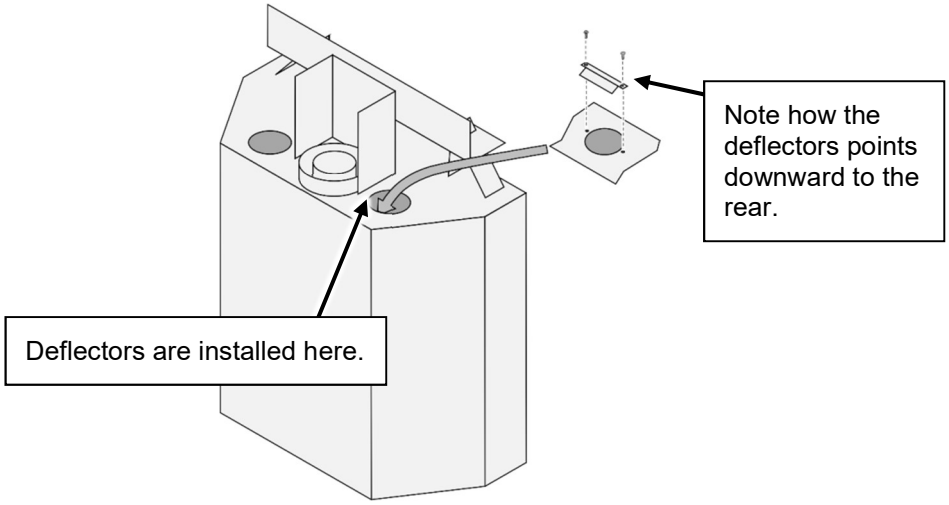

6 Insert a starter collar into each of the (2) holes that were uncovered in the previous step and bend the tabs to secure the starter collar to the fireplace. Seal the joints with silicone caulk or aluminum (U.L. 181A-P) tape.

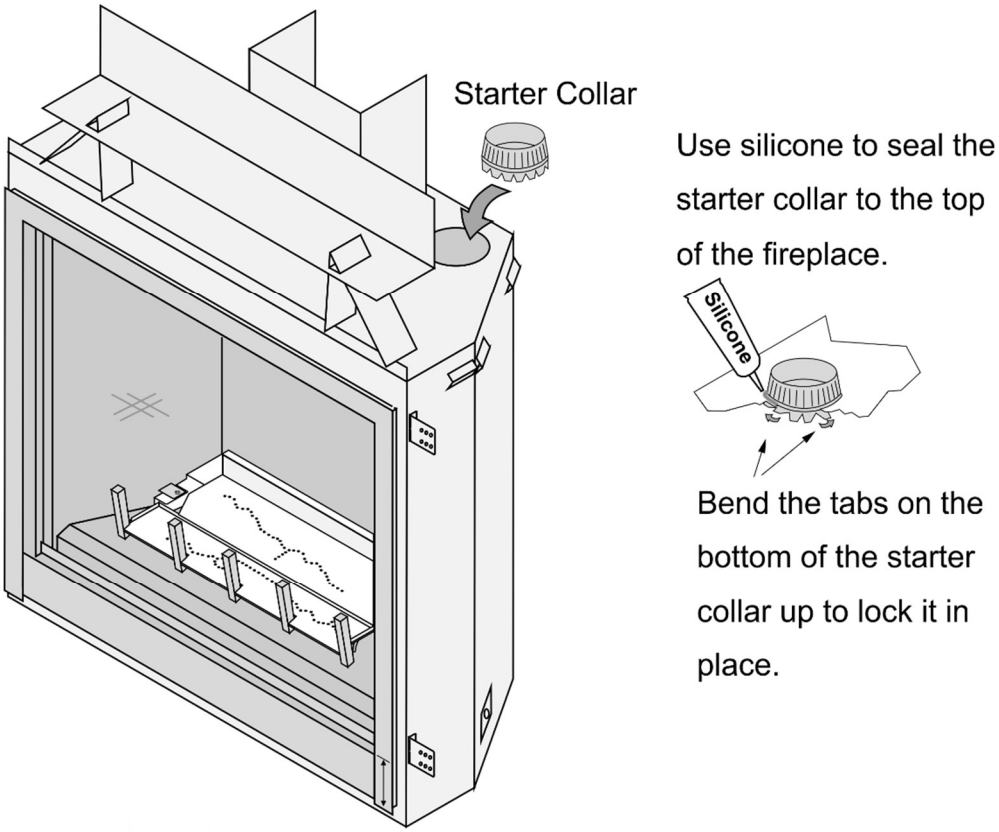

7 Install the fireplace into the framed chase.

Using oval pipe to get past an obstruction

If a situation arises that obstructs the CoolSmart flex vent runs (such as getting past a minimum sideways vent) you may transition the 5” flex vent to a ridged nominal 6” oval pipe to get past the obstruction. Transition back to the 5” round flex and continue to the manifold.

The adapters and ridged pipe should be factory ovalized, not field ovalized.

NOTE: All clearances to combustibles must be maintained.

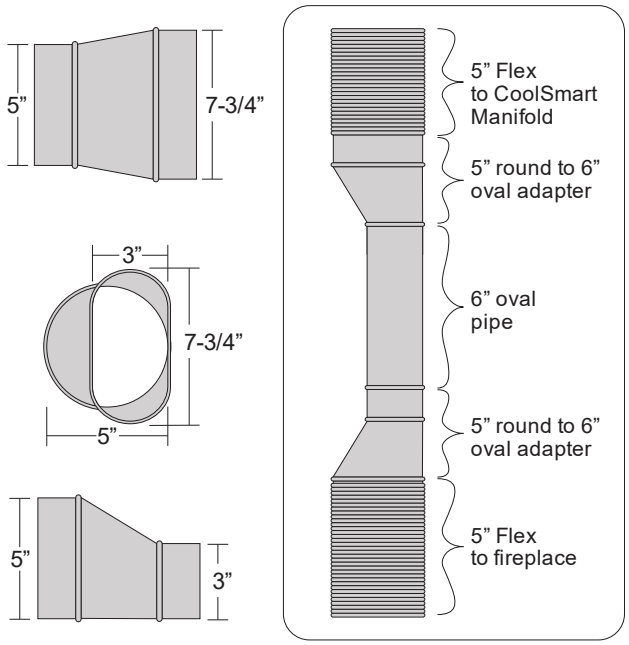

CoolSmart TV - Reduced Mantel Height

When using this kit, disregard the combustible mantel requirements in the manual and follow the requirements shown to the right. If you wish to place a TV above the mantel, it must meet the following requirements:

- Minimum 1” air gap behind TV to wall.
- The mantel must extend 2” in front of the TV and 1” to both sides.

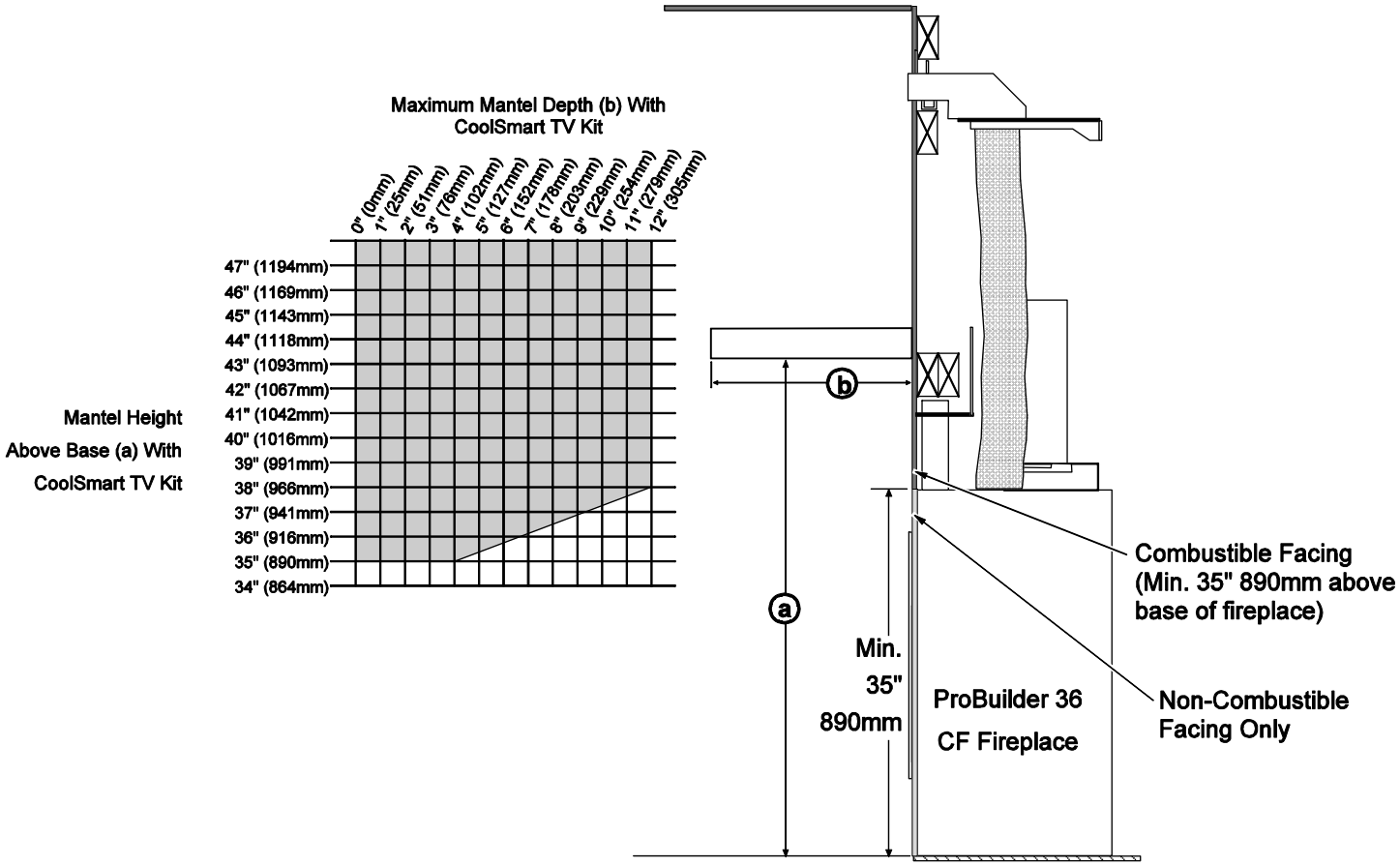

Additional Items Required 7
Air Shutter Adjustment 43
Altitude Considerations 24
Approved Termination 24
Approved Vent 24
Barrier Screen Visual Deflector Adjustment 50
Class A Chimney Conversion 31
Clearances 9
Corner Installations 17
Diffuser 26
Dimensions 6
Electrical Connection 22
Ember bed Glass and Ember Material Installation (GSR2 ONLY) 58
Fireplace Placement Requirements 9
Fuel 20
Gas Line Connection 20
Gas Line Location 21
Gas Line Requirements 20
Glass Frame Removal and Installation 48
Hearth Requirements 33
Heating Specifications 6
Installation Options 6
Location of Controls 44
Log Set Installation 52
LP Conversion Instructions 60
Mantel Column Clearances 40
Mantel Requirements 40
Masonry Chimney Conversions 30
Massachusetts Requirements 8
Minimum Framing Dimensions 10
Optional Equipment Installation 7
Packing List 7
Pilot Fuel Conservation Timer (GSB & GSR units) 47
Pilot Fuel Conservation Timer (MV units) 46
Raised Fireplaces 9
Recommended Installation Procedure 7
Restrictor Position 25
Rock Wool Placement 59
Safety Warnings 4
Shipping Retaining Nut Removal 51
Starting the Pilot 45
Steps for Finalizing the Installation 42
Termination Requirements 32
Vent Clearances 24
Vent Configuration
Horizontal Termination with Vertical Rise 29
Vertical Termination 28
Vent Configurations 27
Vent Firestop 24
Vent Installation 25
Vent Requirements 24
Wiring Diagram - GSB2 67
Wiring Diagram - GSR2 68
Wiring Diagram - MV 66